CITY OF SAN ANTONIO
DEVELOPMENT SERVICES DEPARTMENT
P.O.BOX 839966 I SAN ANTONIO TEXAS 78283-3966

IAS ACCREDITED Building Department

UDC Update Request Application for External Parties
(neighborhoods, external agencies, stakeholders, etc.)

Part 1. Applicant Information

Name: Deborah Reid *Organization (if applicable):* Greater Edwards Aquifer Alliance

Address: 1809 Blanco, San Antonio, Texas, 78212

Phone: (210) 300-9681 *Email:* deborah@aquiferalliance.org

Signature: Deborah Reid Digitally signed by Deborah Reid Date: 2020.04.22 16:50:53 -05'00' *Date:* April 22, 2020

(*Include title if representing a governmental agency or public/private organization*)

Part 2. Basis for Update (check only one)

☐ Clarification amendments to provide for ease of interpretation and understanding of the existing provisions of the UDC (Note: Clarification amendments should not change or alter the intent or meaning of existing UDC provisions)

☐ Editing change that does not alter the impact of the provisions being addressed including changes such as spelling, grammar correction, formatting, text selection, or addition of text in compliance with existing ordinance, statutes or case law

☐ Completed Rule Interpretation Determination (*RID*)

☒ Requested by the Zoning Commission, Planning Commission, Board of Adjustment, HDRC, City Council or other appropriate city board or council (CCR, resolution or signature of the chairperson is required)

Part 3. Reason(s) for Update (check all that apply)

☐ Modify procedures and standards for workability and administrative efficiency

☐ Eliminate unnecessary development costs

☐ Update the procedures and standards to reflect changes in the law or the state of the art in land use planning and urban design

☒ See Part 4 (*if none of the provided choices in this section apply, please discuss the reasons for the proposed update in Part 4*)

Part 4. Summary of Proposed Update with Suggested Text (see application instructions)

These recommendations will reduce the discharge velocities that are responsible for streambank erosion and the loss of resiliency and function to our streams and rivers. They will improve water quality while better protecting immediate downstream properties from flooding.

Summary of Amendment

These recommendations update policy and principles to reflect current scientific understanding of water quality and the importance of stream tributaries and headwaters. They would strengthen technical criteria by requiring a baseline of on-site detention to address moderate storms, as well as requiring calculations to account for routine error..

Supporting Goals

Implement the following Natural Resources and Environmental Sustainability (NRES) Goals included in SA Tomorrow.

NRES Goal 1: San Antonio protects the natural environment and ensures sustainable land use and development.

NRES Goal 6: San Antonio is a national leader in storm water management best practices and low impact development (LID) design.

NRES P19: Continue to manage the capacity and transmission capabilities of the storm drainage network to prevent degradation of natural resources.

NRES P20: Encourage preservation of 100-year floodplains as natural drainage ways without permanent construction, unnecessary straightening, bank clearing or channeling.

APPENDIX H - STORM WATER DESIGN CRITERIA MANUAL

CHAPTER 1 - INTRODUCTION

1.1 - Preface

The purpose of this Storm Water Design Criteria Manual (SWDCM) is to provide the design engineer with the criteria necessary to design drainage facilities in and around the San Antonio area. This SWDCM establishes the standard principles and practices for the planning, design, construction, maintenance, and management of drainage facilities. It is not the intent of this SWDCM to limit the design capabilities or engineering judgment of the design engineer.

Should an error be found within the manual or changes are needed within a section of the manual, please submit these errors and changes to Director of TCI for consideration and inclusion into the next manual update.

(Ord. No. 2019-04-11-0306 , § 1(Att. 1), 4-14-19)

CHAPTER 2 - DRAINAGE POLICY

2.1 - Introduction

The drainage policy for the City of San Antonio has changed over the years to provide for the orderly development of drainage improvements to enhance the health, safety, and welfare of its citizens, their property, and the environment. The City has implemented a comprehensive storm water management program through guidance provided by the Drainage Regulation Review Committee in February 1996 with a regional approach to meet the policies of the City Master Plan.

2.2 - Statement Of Policy

The purpose of this manual is to provide adequate measures for the retention, detention, and distribution of storm water in a manner that minimizes the possibility of adverse impacts on both water quantity and water quality during development. Innovative runoff management practices designed to meet the provisions of this manual, enhance the recharge of groundwater, and maintain the function of critical environmental features are encouraged. The city recognizes that watercourses, and their associated watersheds, within the City of San Antonio's jurisdiction represent significant, irreplaceable, recreational, and aesthetic resources and contribute to the economic and environmental health of the city. As all of these watersheds are susceptible to concentrated surface water runoff, disturbance of wildlife habitat, non-point source pollution, and sedimentation ~~development activities~~ they should be developed in a sensitive and innovative manner to address these concerns.

This manual implements the following policies of the master plan (Section 121 of City Charter, Resolution 97-05-01 approved May 14, 1997, Ordinance 86100 approved May 29, 1997):

- Natural Resources, Policy 1d: Encourage retention of the 100-year floodplains as natural drainage ways without permanent construction, unnecessary straightening, bank clearing, or channeling.

- Natural Resources, Policy 1d: 2. Adopt strong storm water management practices throughout the drainage area which include site specific measures such as:

  - On-site storm water retention and detention;

  - Reduction in impervious cover;

- Natural bank contouring;

- Floodplain preservation and buffering;

- Preservation of riparian habitat;

- Storm water harvesting sites for reuse purposes.

Urban Design, Policy 1g: Prepare design and construction policies and standards for utility and transportation infrastructure, capital improvement projects, public facilities, and development projects that reinforce neighborhood centers and provide diverse, pedestrian-friendly neighborhoods.

If principles cannot be met, please visit with the Director of TCI or his authorized representative.

2.3 - Principles

Listed below are a few guiding principles to consider while developing drainage for the project site:

- Preserve floodplain and riparian buffers and their ecological functioning.
- Preserve smaller streams to reduce flooding downstream, improve water quality, increase recharge and provide flood resiliency and aquatic habitat.
- Enhance the health, safety, and welfare of its citizens with multi-use facilities.
- Develop cost effective solutions.
- Develop drainage facilities for easier or reduced maintenance.
- Enhance recharge and water quality within streams and rivers.
- Minimize impacts to existing drainage facilities.

2.4 - Basic Knowledge

Prior to designing any project, the design engineer should gather and examine existing information of the project area within the watershed under consideration. From this information the design engineer can then determine if the upstream area will impact the project site or if the proposed development will impact existing downstream drainage systems or structures.

2.5 - Planning

The planning of a project should consider the guiding principles stated above. There are many other guiding principles to consider during the planning of a development or a capital improvement project, including integrated planning by engineer, architect, landscape architect, and other applicable professionals to maximize multi-use features and on-site storm water management performance.

2.6 - Technical Criteria

The storm drainage planning and design should follow the criteria within this manual.

The following ~~two~~ items should be considered during the design process.

1) Diversion of storm water away from the natural watercourse will not be allowed, except within the property boundaries controlled by the developer under the following conditions: a) The storm water is returned to its natural flowing watercourse prior to leaving the developer's property, b) For watersheds greater than twenty (20) acres, a timing analysis of the existing and diverted hydrograph must be performed to confirm that the peak flow rate has not been increased at the point that it reenters the watercourse, as a result of the diversion.

2) All developments shall provide adequate and appropriate drainage outfall at the lower end of the site into an existing street, alley, drainage, easements or right-of-way, or to the centerline of an existing natural drain. Where a proposed street, storm drain, or open channel does not discharge into a natural low or into an existing adequate drainage easement, then facilities and drainage easements of adequate width — to contain the design discharge — shall be constructed and dedicated to the centerline of an existing natural low within the same watershed. However, when the natural low lies within the developer's property, the developer will only be required to plat an easement to the centerline of the natural low; provided that the easement is able to accommodate the facilities that will be built in conjunction with future development of that property.

3) All developments shall provide detention on site for a 5 year, 24-hour storm event that will include a water quality component to meet the standards set forth in Sec. 35-210. The water quality requirement for storage systems can be met by providing 24 hours of the WQv (provided a micropool is specified) extended detention. Features to meet this requirement may be situated throughout the site ensuring that the storm water quantity and quality leaving the site meets the requirements. The remainder of storm water required to be managed for ultimate build-out shall do so in accordance with 4.3.1.

4) Hydrologic runoff calculations shall be buffered with an additional 10% to accommodate site variability and data collection inaccuracies.

- Floodplain Management

Floodplain management has changed over the years due to the National Flood Insurance Act of 1968. Changes from the program included USGS maps being used with the delineation of floodplains, HUD issuing flood insurance maps in the late 1970s, and the founding of FEMA in 1979. The National Flood Insurance Program was ultimately placed under FEMA. As the City began participating in this action in the late 1970s, flood insurance can be purchased through insurance carriers for buildings in Bexar County.

Floodplain management is used to minimize flooding of buildings, reduce flood losses, and improve the quality of life — and safety of the citizens of Bexar County.

2.8 - Implementation

The provisions of this manual shall apply to any application for subdivision plat, master development plan, capital improvement project, or building permit approval except as otherwise provided by Chapter 35 of the UDC. A storm water management plan shall be provided as set forth in Appendix "A" of this manual.

2.9 - References

• City of San Antonio. *Master Plan Policies*. Department of Planning & Community Development, City of San Antonio, San Antonio, Texas, Adopted: May 29, 1997. Retrieved from http://www.sanantonio.gov/Portals/0/Files/Planning/NPUD/master_plan.pdf

CHAPTER 3 - DRAINAGE LAW

3.1 - INTRODUCTION

This chapter briefly references the laws and related policies that affect hydrologic and hydraulic designs for all public and private projects within the City of San Antonio and its Extraterritorial Jurisdiction (ETJ). These laws and policies include Federal, State, and Local Codes and regulations. Not all laws, statues, codes, or regulations are included.

3.2 - FEDERAL LAWS AND REGULATIONS

3.2.1 - The Code of Federal Regulations

The Code of Federal Regulations (CFR) is the codification of the general and permanent rules and regulations.

3.2.2 - National Flood Insurance Program

The NFIP was established under the National Flood Insurance Act (NFIA) in 1968 to reduce future flood losses through local floodplain management. NFIP requires participating cities, counties, or states, to adopt floodplain management ordinances containing certain minimum requirements intended to reduce future flood losses.

3.2.3 - National Environmental Policy Act

NEPA was passed in 1969, 42 United States Code (U.S.C.) 4321-4347, to establish a national policy to prevent or eliminate damage to the environment and improve the understanding of the ecological systems and natural resources that are important to the Nation.

3.2.4 - Rivers and Harbors Act

Rivers and Harbors Act of 1899 - Allows the US Army Corps of Engineers (USACE) to regulate the navigable waters of the United States (WOUS). Section 9 (33 USC 401) prohibits the construction of any dam or dike across any navigable WOUS without a permit from the USACE. Section 10 (33 USC 403) prohibits the unauthorized obstruction, alteration, work affecting the course, location, condition, or physical capacity of any WOUS is unlawful unless the work has been reviewed and approved by the USACE.

3.2.5 - The Federal Water Pollution Control Act

The Federal Water Pollution Control Act, 33 USC 1251-1387, was adopted in 1948 and, after amendments in 1972 and 1977, became known as the Clean Water Act (CWA). This act was enacted for the regulation of pollutants in the WOUS with the objective of restoring and maintaining the chemical, physical, and biological integrity of the nations' waters. This Act operates by authorizing water quality standards for surface water, requiring permits for point discharges of pollutants into WOUS. The EPA is the primary agency tasked with enforcing the CWA, although it also works in conjunction with State Environmental Agencies and the USACE.

3.2.6 - Section 402 of the CWA

National Pollutants Discharge Elimination System - NPDES was established by the EPA in 1990 and contains regulations for point source Storm Water Discharge. The purpose of this legislation is to improve the quality of the nation's rivers, lakes, and streams by setting limits for point source discharging pollutants into waters of the United States and establishes monitoring and reporting requirements.

3.2.7 - Section 404 of the CWA

Section 404 makes it unlawful to discharge dredged or fill material into WOUS without first receiving authorization from the USACE. The types of 404 Permits include Nationwide Permits, General Permits, and Individual Permits.

3.2.8 - Endangered Species Act (ESA)

The ESA was passed by congress in 1973, its purpose was to protect and recover imperiled species and the ecosystem upon which they depend. It is administered by the U.S. Fish and Wildlife Service.

3.3 - STATE STATUTES AND RULES

3.3.1 - Texas Water Code - Section 11.086

Texas Statutes - Section 11.086(a) No person may divert or impound the natural flow of surface waters in this state, or permit a diversion or impounding by him to continue, in a manner that damages the property of another by the overflow of the water diverted or impounded. (b) A person whose property is injured by an overflow of water caused by an unlawful diversion or impounding has remedies at law and in equity and may recover damages occasioned by the overflow. (c) The prohibition of Subsection (a) of this section does not in any way affect the construction and maintenance of levees and other improvements to control floods, overflows, and freshets in rivers, creeks, and streams or the construction of canals for conveying water for irrigation or other purposes authorized by this code. However, this subsection does not authorize any person to construct a canal, lateral canal, or ditch that obstructs a river, creek, bayou, gully, slough, ditch, or other well-defined natural drainage. (d) Where gullies or sloughs have cut away or intersected the banks of a river or creek to allow floodwaters from the river or creek to overflow the land nearby, the owner of the flooded land may fill the mouth of the gullies or sloughs up to the height of the adjoining banks of the river or creek without liability to other property owners. Amended by Acts 1977, 65th Leg., p. 2207, ch. 870, Sec. 1, eff. Sept. 1, 1977.

3.3.2 - Texas Water Code - Section 16.236

Texas Statutes - Section 16.236 - Construction of Levee Without Approval of Plans; The commission shall make and enforce rules and orders and shall perform all other acts necessary to provide for the safe construction, maintenance, repair, and removal of levees located in this state.

3.3.3 - Texas Commission on Environmental Quality - Chapter 213

Title 30 of the Texas Administrative Code Chapter 213 Edwards Aquifer Subchapter A. TAC Chapter 213 became effective on April 24, 2008 and its purpose was to regulate activities having the potential for polluting the Edwards Aquifer and hydrologically connected surface streams in order to protect existing and potential uses of groundwater and maintain Texas Surface Water Quality Standards. The activities addressed are those that pose a threat to water quality. Consistent with Texas Water Code, Section 26.401, the goal of this chapter is that the existing quality of groundwater not be degraded.

3.3.4 - Texas Commission on Environmental Quality - Chapter 299

Title 30 of the Texas Administrative Code Chapter 299 for Dams and Reservoirs. This chapter applies to design, review, and approval of construction plans and specifications; and construction, operation and maintenance, repair, removal, emergency management, site security, and enforcement of dams that (1) have a height greater than or equal to 25 feet and a maximum storage capacity greater than or equal to 15 acre-feet, as described in paragraph (2) of this subsection; (2) have a height greater than six feet and a maximum storage capacity greater than or equal to 50 acre-feet.

3.4 - LOCAL CODES/ORDINANCES/COURT ORDERS

3.4.1 - City of San Antonio Texas Unified Development Code

3.4.2 - City of San Antonio Flood Plain Ordinance 57969

3.4.3 - Bexar County Flood Damage Prevention

Court Order was approved by Commissioners. Court sometime in the 1980s and it includes the minimum standards deemed necessary to minimize or eliminate flood damage to the areas within Bexar County and outside of incorporated cities.

3.4.4 - Aquifer Protection Ordinance 81491

Approved on January 12, 1995, by the San Antonio City Council amending Chapter 34, Article VI, of the City Code by adding a new Division 6 thereunder tilted "Aquifer Recharge Zone and Watershed Protection". This ordinance requires that for all projects in the Edwards Aquifer Transition or Recharge Zone submit to the SAWS Resource Protection Division an Aquifer Protection Plan for approval prior to development.

3.4.5 - (Ord. No. 97568 § 2) Storm Water Management Plan Checklist

3.4.6 - (Ord. No. 2006-11-30-1333, § 2, 11-30-06) Maintenance

Maintenance of Sidewalks, parkways, curbs, downspouts, and driveways by abutting owners.

3.4.7 - (Ord. No. 2009-08-20-0661, § 3, 8-20-09) Amendments to Chapters 19 and 35

Amendments of the City Code for further technical amendments to Chapter 35 Unified Development Code.

3.4.8 - Ordinance No. 2010-11-18-0985

Requires that developers provide a one year warranty bond for public streets and public drainage improvements. The one year warranty period shall begin on the date the plat is recorded or the date of preliminary field approval of the improvements, whichever is later in time.

3.4.9 - (Ord. No. 2013-01-31-0074) Amending FILO Ordinance of 1997

This Ordinance amends the methodology for calculating the fee-in-lieu-of onsite detention; increasing fees to all land use categories; and amending Article V, Chapter 35 of the Unified Development Code.

3.4.10 - (Ord. No. 2014-06-19-0472) Amendments to Chapter 34

This Ordinance amends chapter 34 for the purpose of updating program requirements to reduce or eliminate the discharge of harmful pollutants into the SAWS Sanitary Sewer System and the City's Storm Water System in compliance with current State and Federal regulations.

CHAPTER 4 - PLANNING

4.1 - Introduction

This chapter will touch on the aspects of planning in regard to drainage.

Planning for different components of a project is crucial to the success of the project, whether the project is a residential subdivision, commercial development, or a capital improvement project. The Design

Engineer must consider the impacts to the existing drainage systems as well as the aesthetics of the planned improvements.

The City of San Antonio had commissioned a study in the 1950s to determine drainage improvement needs throughout the City of San Antonio (City Drainage Master Plan). These improvements cost hundreds of millions of dollars and a number of the improvements were funded over the years through bond programs and other funding sources. In more recent years, following the development of the Digital Flood Insurance Rate Maps (DFIRM) for Bexar County, a number of additional flooding issues were realized throughout Bexar County. These flooding issues were studied and a Regional Drainage Master Plan was developed to address these issues.

The following should be considered during the development of the project:

Multi-use facilities are encouraged, but not required. Multi-use facilities allow for water quality, satisfy National Pollutant Discharge Elimination System (NPDES) requirements, enhance ground water recharge, provide open space, provide recreation or other amenities, and/or provide habitat. Multi-use facilities may be utilized so long as the facility meets the standards set forth in Chapter 2.8 of this manual and does not increase the rate or volume of erosion above that which would result from the use of a facility without multiple uses. Utilization of multi-use detention facilities to alleviate existing flooding problems, enhance and provide amenities for older neighborhoods, and support the revitalization of economically depressed areas is encouraged in public and private redevelopment initiatives.

4.2 - Regional Drainage Master Plan (Watershed Master Plan)

The Bexar Regional Watershed Management (BRWM) is a partnership among Bexar County, the City of San Antonio, the San Antonio River Authority and 20 suburban cities to address flood management and water quality concerns on a regional basis.

An Inter Local Agreement for Bexar Regional Watershed Management program was approved in May 2003 and amended in April 2010 between the managing partners (Bexar County, the City of San Antonio, and the San Antonio River Authority). The oversight and implementation process for this program includes elected officials, entity staff at all levels, and most importantly, a citizens' advisory process. The program was set up to develop and implement efficient and economic flood control throughout Bexar County.

A number of potential Capital Improvement Projects have been identified through the BRWM Watershed Master Plans. A number of these projects within the Watershed Master Plan have been funded and constructed.

4.3 - Regional Storm Water Management Program (RSWMP)

This section represents the policies of the RSWMP and understanding this section will enable the design engineer to provide utility and transportation infrastructure, capital improvement projects, public facilities, and development projects meeting the policies of the UDC.

4.3.1A - RSWMP Overview and Community Goals

The City of San Antonio determined that regional storm water management based on a watershed approach, is preferable and will include ~~to~~ site-specific storm water mitigation. Regional management will be crucial in mitigating drainage and flooding impacts from large storm events and in maintaining the ecological functioning of floodplain systems. The regional portion of the storm water management program provides for the administration, planning, design, construction, and operational management of regional storm water facilities (RSWF). Regional storm water management uses a watershed-wide approach to analyze potential flooding problems, identify appropriate mitigation measures and select site locations and design criteria for RSWF. These RSWF include, but are not limited to, regional detention and retention ponds, watershed protection, land purchase, waterway enlargement, channelization, and

improved conveyance structures utilizing green infrastructure, natural channel design and restoration techniques that will incorporate water quality and debris capture components. The regional storm water management program allows developers to participate in the program to meet requirements greater than those for a twenty-five (25) year storm rather than constructing ~~the~~ on-site ~~detention controls required by this section~~, when the City has determined that the increased runoff from the proposed development will not produce a significant adverse impact to other properties ~~as outlined in 4.3.1C~~ or on those features receiving the runoff discharged from the site.

4.3.1B - RSWMP Participation

All developers shall participate in the RSWMP in the following ~~one (1) of three (3)~~ ways:

1. Payment of a fee in lieu of on-site detention in combination with on-site detention as outlined in 2.6.3 (except in areas designated by the Director of TCI as "mandatory detention areas"). The fee schedule is included in UDC Appendix "C," section 35C-109.
2. Construction of on-site water quality facilities where the remainder of runoff will be mitigated by ~~and or~~ off-site measures located within the same sub-watershed (typically storm water detention facilities) to mitigate increases in runoff resulting from the proposed development anticipated from ultimate development of the watershed plus freeboard (based on Table 9.3.14).
3. ~~Construction or~~ P~~p~~articipation in the construction of an off-site RSWF within the same sub-watershed in combination with on-site detention as outlined in 2.6.3 to mitigate increased storm water runoff anticipated from ultimate development of the watershed.

4.3.1C - Adverse Impact

To determine a significant adverse impact for the purposes of this section, the following criteria will be used to analyze the receiving storm water facilities within two thousand (2,000) linear feet of the project, to the nearest downstream RSWF, or to the nearest floodplain with an ultimate analysis accepted by the city, whichever is less. For lots less than three (3) acres in size, adverse impact analyses need only extend to where tributary drainage areas equal one hundred (100) or more acres.

1. The storm water surface elevation (WSE) in receiving facility [natural or improved] drainage systems within two thousand (2,000) linear feet of the proposed development may not be increased by the proposed development unless the increased WSE is contained within easements or rights-of-way or the receiving systems have sufficient capacity to contain the increased WSE without increasing flooding to habitable structures.
2. Ultimate development runoff at low water crossings during regulatory (five (5), twenty-five (25), and one hundred (100) year frequency) storm events must not classify the low water crossing as "Dangerous to Cross" based on Figure 4.3.1.C. If the ultimate WSE exceeds this criterion, the crossings may be improved to the standards of this chapter in lieu of providing onsite storm water control measures or paying a fee.
3. Three (3) development conditions shall be analyzed with each adverse impact analysis.

   Existing Conditions. This refers to current development conditions in the watershed and on site. This shall be used as the baseline for determining the impact of the development of the site, or the watershed, to other properties or drainage systems.

   Proposed Conditions. This refers to existing conditions with the proposed development added. This shall be used to determine if the increased runoff from the proposed development results in an adverse impact to other properties or drainage systems including the physical impacts due to erosion, scour and deposition associated with increased frequency and volume of runoff that negatively alters the ecological functioning of the receiving water body. The NRCS allowable velocity

and sheer stress method will be used to calculate impact and capacity of the receiving water body/floodplain within the watershed at ultimate conditions.

Ultimate Conditions. This refers to ultimate development conditions within the watershed. In addition to being used to design proposed drainage facilities (subsection "4.3.2 System Criteria," below), this condition shall also be used to determine if the increased runoff from the ultimate development of the watershed results in an adverse impact to other properties or drainage systems.

In addition to verifying low water crossing capacity (item 2, above), this analysis shall be used to assist the city in identifying watershed wide storm water management issues.

4. Minimum standards for identifying Dangerous Roadway conditions are identified in Figure 4.3.1C below.

   Note: The City of San Antonio contends that any runoff crossing a roadway creates a potentially dangerous condition. Figure 4.3.1C represents the maximum flow depth over roadways that the City will accept in adverse impact analyses signed and sealed by the licensed professional engineers.

   Figure 4.3.1C 1 - Roadway Flow Depth vs. Velocity

5. The City of San Antonio may reject a developer's request to participate in the RSWMP by payment or mitigation and require on-site detention. The City's decision will be based on the knowledge of significant adverse impacts that would be created by ultimate development of the watershed regardless of the distance from the development to the area of concern. The City may also reject a request for participation when it is not in the best interests of the RSWMP. The developer is recommended to meet with TCI Storm Water Division to discuss participation options prior to commencing design of a project. This preliminary meeting in no way relieves the developer of his responsibility to prepare the necessary engineering documentation to support his request for participation.

4.3.1D - Fee in Lieu of

The storm water development fee in lieu of ~~on-site detention~~ must be paid prior to a plat being released for recordation by the City of San Antonio or the issuance of a building permit. The fee shall be determined in accordance with the provisions of UDC Section 35-C109, storm water management fees.

4.3.2 - System Criteria

All storm water management facilities, or combination of facilities, shall be designed for ultimate development. Facilities with drainage areas less than one hundred (100) acres shall be designed for a twenty-five (25) year storm. Facilities with drainage areas over one hundred (100) acres or areas within a FEMA designated floodplain shall be designed for a one hundred (100) year storm or a twenty-five (25) year storm plus freeboard (based on Table 9.3.14) if that elevation is higher. Detention facilities and streets are exceptions to the frequency criteria cited above. Detention facility outflows will be designed for five (5) year, twenty-five (25) year and one hundred (100) year frequency storms. Refer to subsection 6.2 for specific drainage design criteria for streets.

4.3.3 - Responsibility to Accept Storm Water

The owner or developer of property to be developed shall be responsible for the conveyance of all storm water flowing through the property. This responsibility includes the storm water flowing onto the property by any other developed property as well as the drainage naturally flowing through the property by reason of topography. Future upstream development shall be accounted for by assuming ultimate development when sizing drainage systems as specified in this section. Existing detention facilities may be accounted for in the ultimate analysis and shall be incorporated in the models if included.

4.3.4 - Positive Overflow Pathways

Storm water management facilities for local drainage systems will be designed to ensure that a positive overflow pathway is provided to the nearest one hundred (100) year conveyance facility. The overflow pathway must be delineated on a plan that shows all existing structures in the vicinity impacted by the overflow pathway.

4.3.5 - Maintenance

Maintenance of publicly owned facilities will be the responsibility of the City. Maintenance of private facilities is the responsibility of the property owner or the community association and must be specified in the maintenance schedule submitted to the City. A maintenance schedule for both publicly owned and privately owned facilities must be approved by the Director of TCI prior to the approval of construction drawings.

4.3.6 - Inspection

Authorized personnel from the City of San Antonio or Bexar County within the ETJ shall conduct periodic inspections of these facilities and structures. Any required repairs will be consistent with current construction standards. Maintenance issues identified by the City, County, or State during inspections shall be the responsibility of the current owner.

4.3.7 - New Development

Peak storm water runoff rates from all new development shall be less than or equal to the peak runoff rates from the site's predevelopment conditions for the five (5), twenty-five (25), and one hundred (100) year design storm events, except as provided in section 4.3.1 above.

4.3.8 - Redevelopment

Peak storm water runoff rates from an area of redevelopment due to zoning or replatting shall be less than or equal to the peak runoff rates produced by existing development conditions for the five (5), twenty-five (25) and one hundred (100) year design storm events, except as provided in section 4.3.1 above.

4.3.9 - Low Impact Development

The City of San Antonio encourages the installation of low impact development (LID) features such as bioretention, permeable pavement with storage, engineered swales, engineered infiltration storm drain systems, and engineered wetlands. For all developments proposed within the City of San Antonio jurisdictional boundaries, these features may be considered on-site detention features to the extent that they reduce the storm water runoff expected downstream as a result of such developments. It shall be the developer's responsibility to demonstrate that said LID features provide such benefit. Credit toward RSWMP fees will be considered and approved on a case by case basis by the Director of TCI.

4.4 - Subdivision/Development

This section represents the policies of the City of San Antonio Unified Development Code as it relates to drainage and is included as a reference for the design engineer.

4.4.1 - Major Plat

A Major Plat is a subdivision of property into five (5) or more lots or has infrastructure that is required to facilitate the development of the property. If there is an alteration of an existing floodplain or any drainage facility or other infrastructure is required, then the platting of property will fall under a Major Plat. A Storm Water Management Plan Report is required for the plat. Should the Storm Water Management Plan Report show no adverse impact within the reach downstream of the proposed development per section

4.3.1C and the City has reviewed and concurs with the findings; the developer may participate in the RSWMP by payment of the "Fee in Lieu of" (FILO) instead of providing detention.

4.4.2 - Minor Plat

A Minor Plat is a subdivision of property into four (4) or less lots and no infrastructure is required to facilitate the development of the property. A Storm Water Management Plan Report is required for the plat. Should the Storm Water Management Plan Report show no adverse impact within the reach downstream of the proposed development per section 4.3.1C and the City has reviewed and concurs with the findings; the developer may participate in the RSWMP by payment of the "Fee in Lieu of" (FILO) instead of providing detention.

4.4.3 - Replat

A replat is for property that was previously platted and the property will be reconfigured or further subdivided. A Storm Water Management Plan Report is required for the replat. If the previous plat had paid a fee to participate in the FILO and the Storm Water Management Plan Report show no adverse impact within the reach downstream of the proposed replat per section 4.3.1C and the City has reviewed and concur with the findings, the developer may continue to participate in the FILO, by paying any additional fees if required.

4.4.4 - Amending Plat

An Amending Plat is for correcting an error on a previously approved or recorded plat. There should be no changes to drainage facilities or infrastructure. A letter will be required with the plat submittal that there are not changes to drainage facilities or infrastructure.

4.4.5 - Master Development Plan (MDP)

The Master Development Plan is a conceptual long range development plan that provides an overall view for residential or commercial development. The MDP requires a Storm Water Management Plan Report to show what impacts the development might have on existing infrastructure and floodplains. The SWMP Report may require updating if the report is referenced during plat reviews. In addition, if the MDP SWMP Report is submitted with a plat review, a letter identifying what pages of the report are relevant to the plat area along with an exhibit identifying where the platted area is in relation to the overall MDP area will be required.

4.4.6 - Planned Unit Development (PUD)

The Planned Unit Development is considered under the Master Development Plan. The streets within a PUD may be public or private. Drainage facilities shall conform to storm water management standards. A Storm Water Management Plan Report is required for the PUD.

4.4.7 - Enclave

An Enclave subdivision will have private streets. The private streets are design and constructed to public street standards. Drainage facilities shall conform to storm water management standards. A Storm Water Management Plan Report is required for the Enclave subdivision.

4.4.8 - Master Plan Community District (MPCD)

The Master Plan Community District is considered under the Master Development Plan. The streets within a MPCD may be public or private. Drainage facilities shall conform to storm water management standards. A Storm Water Management Plan Report is required for the MPCD.

4.4.9 - Master Development Pattern Plan (MDPP)

The Master Development Pattern Plan is considered under the Master Development Plan. Drainage facilities shall conform to storm water management standards. A Storm Water Management Plan Report is required for the MDPP.

4.4.10 - Inner City Reinvestment/Infill Policy (ICRIP)

A development within the ICRIP target area and fit into one of the following two categories; Residential, Mixed use Development; or Commercial/Industrial Development with drainage facilities shall conform to storm water management standards. A Storm Water Management Plan Report is required for the development at the platting stage. The development may qualify for Waivers of City and SAWS fees. If the development within the ICRIP area is less than twenty thousand (20,000) square feet then the development is exempt from the FILO fee. If the development within the ICRIP area is greater than twenty thousand (20,000) square feet then the development is subject to fifty percent (50%) of the FILO fee.

4.4.11 - Infill Development Zone (IDZ)

A development within the IDZ area shall comply with the storm water management standards with the following exception. The reuse of an existing building or the development of an existing parcel or lot of less than ten thousand (10,000) square feet where there is not an increase in impervious surfaces. An approved Storm Water Management Plan shall be required for plat approval. The development within an IDZ area is exempt from the FILO fee.

4.4.12 - Redevelopment Projects

A development project that redevelops an existing site shall conform to storm water management standards. A Storm Water Management Plan Report is required for the redevelopment. If the existing site included some impervious cover prior to 1997 and the development is eligible for the FILO, then the fee would be paid on additional impervious cover. The exception to the FILO fee would be if the redevelopment is within an ICRIP or IDZ areas.

4.5 - Planning for the Floodplain

There are a number of floodplains across the county that may impact a development or the development may impact the floodplain. The engineer should consider, during the planning of the development, to minimize the impacts to the floodplain.

Where the floodplain is part of the development, and where possible, multiple uses of drainage facilities and open space shall be incorporated by the owner or developer of a new subdivision. Alternative uses such as:

- public recreation
- horse/bike/hiking trails
- walking paths
- nature preserves
- wildlife habitat areas, etc.

are encouraged subject to the approval of the Director of TCI.

The above alternative uses should enhance the floodplain and provide a benefit to the development.

4.6 - Planning for Drainage Systems

There are many components that may make up the drainage system within a development. These components should work together to provide an economical solution for the conveyance of storm water to an outfall location.

Should the conveyance of the storm water require the alteration of the natural water course, the following will apply.

Diversion of storm water away from the natural watercourse will not be allowed, except within the property boundaries controlled by the developer provided that the diverted water is returned to its natural flowing watercourse prior to leaving the developer's property. A timing analysis of the diverted hydrograph on watersheds greater than twenty (20) acres, as it reenters the receiving watercourse, must be performed to show that the peak flow rate has not been increased as a result of the diversion.

Where possible, multiple uses of drainage facilities and open space shall be incorporated by the owner or developer of a new subdivision. Alternative uses such as:

- public recreation
- horse/bike/hiking trails
- walking paths
- nature preserves
- wildlife habitat areas, etc.

are encouraged subject to the approval of the Director of TCI.

The above alternative uses should enhance the drainage facilities and provide a benefit to the development.

4.6.1 - Storm Water Management Plan Checklist

The Storm Water Management Plan Checklist is provided in Appendix A as a reference.

4.7 - Planning for Storage

Storage of storm water may be needed for a proposed development or for the mitigation of an existing flooding problem. There are different storage solutions available to the design engineer. These may include regional storage facility, surface or underground storage facilities, or natural surface areas.

Some of the items that need to be considered during the planning process are:

- Is the development/site within a mandatory detention area?
- Is there a regional detention close to the development/site?
- What are the downstream drainage system capacities/restrictions?
- Is the storage facility private or public?
- Who will maintain the facility? (property owner, homeowners association, or public agency)
- What permits are required?

The following should be considered during the planning process for surface storage facilities.

Where possible, multiple uses of drainage facilities and open space shall be incorporated by the owner or developer of a new subdivision. Alternative uses such as public recreation, horse/bike/hiking trails, walking paths, nature preserves, wildlife habitat areas, etc. are encouraged subject to the approval of the Director of TCI.

Storm water detention facilities shall be located in topographically depressed areas where possible. When necessary, dams may be constructed to detain flows.

For developments that require a subdivision plat and a storage facility is required/needed, the following deferral may be considered with the approval of Director of TCI. The deferral is for the final design and construction of the storage facility to be completed before any additional development occurs on the property.

Full detention basin design may be deferred until the building permit stage IF the property owner submits a "request for detention deferral" demonstrating an understanding of the implications of such design deferral AND the following notes are placed on the subdivision plat AND supporting documentation is provided.

1. "Storm water detention is required for this property. Building permits for this property shall be issued only in conjunction with necessary storm water detention approved by the City of San Antonio. The property may be eligible to post a fee in lieu of detention (FILO) if offsite drainage conditions allow but only when approved by the City of San Antonio. Maintenance of on-site storm water detention shall be the sole responsibility of the lot owners and/or property owners association and their successors or assignees."
2. "No building permit shall be issued for this platted property until a storm water detention system design has been approved by the City of San Antonio or Bexar County for commercial properties within the ETJ."

4.8 - Planning for Transportation

The streets and highways within the San Antonio area provide the connections for private and public transportation. The streets are used for different modes of transportation, but are also used for the collection and conveyance of storm water. Arterial streets shall remain passable during a storm event as described in Chapter 6.2.1.1. All culvert and bridge crossings shall be "all weather crossings" to allow safe passage of all modes of transportation during a storm event as described in Chapters 10.1 and 11.1 respectively.

4.9 - Planning for Open Space

A viable system of natural open space that serves to protect and conserve cultural resources, riparian areas, significant natural features, and preserve floodplains will help reduce erosion, provide recharge, improve water quality, and help reduce impacts of development.

These open space areas shall be covered by some form of easement and deed restrictions for allowed uses. These uses shall be compatible with the open space and may provide some low-impact forms of recreation such as walking, bicycling and nature watching are encouraged.

Should a drainage facility traverse or be adjacent to an open space, every effort should be made to make sure that the facility is compatible with the open space.

4.10 - Planning for LID

Low Impact Development is a land development approach which manages storm water runoff close to its source. It can be a cost effective tool for managing storm water while meeting multiple goals and

enhancing the site. Technical guidance for the overall site and specific BMP design is found in the San Antonio River Basin Low Impact Development Technical Design Guidance Manual.

4.11 - Planning for Dams

Dams are used for the capture of storm water, which may contain an outlet structure.

The storm water impounded by a dam may impact upstream or adjacent property owners. A drainage easement as described in Chapter 15.5, shall be required to cover the storm water impoundment area.

An overflow structure should be considered for storms greater than the design storm and to eliminate the overtopping of the dam.

Upstream of an existing or proposed dam, the elevations of structures should be placed such that the finished floor is at a minimum of one foot above the top elevation of the dam and above the backwater elevation.

Downstream of an existing or proposed dam, placement of structures immediately downstream should be avoided and elevation of structures should be placed such that the finished floor is at a minimum of one foot above the backwater or breach water surface elevation.

If a dam is proposed, impacts to development and infrastructure, both upstream and downstream shall be evaluated.

4.12 - Maintenance Standards

The following section is intended to provide guidance on general maintenance responsibilities and designation for Public and Private Drainage Easements. It is not meant to address rights or responsibilities associated with emergency situations.

An easement is a grant of one or more property rights by a property owner to another person or entity. Private drainage easements are typically necessary when storm water is to be conveyed across private property from a separate private property up to a contributing drainage area of 100 acres. Public drainage easements are typically necessary when the off-site contributing drainage area exceeds 100 acres or if the contributing area is a FEMA designated floodplain. Additionally, public drainage easements are typically necessary when storm water is to be conveyed across private property from public property, public rights-of-way and easements, or public infrastructure to an established channel, creek, or other public drainage system.

Drainage easements are a form of utility easement and per the Unified Development Code are required to be labeled or designated "public" or "private". Maintenance is action taken to restore or preserve the design functionality of any facility or system. The granting and acceptance of an easement does not confer ownership but rather confers the right to use a landowner's property in some specific way. Per the Unified Development Code, the City of San Antonio assumes no responsibility for the maintenance, installation or improvement of pipes or storm water systems within an enclave or planned unit development. There is also a general duty under state law for property owners to keep their property free from nuisance and in a reasonably safe condition.

Drainage easements allow the City of San Antonio to perform certain maintenance and make repairs to drainage structures, at its option and as necessary, so that the overall safety and health of the city related to drainage can be maintained. The property owner retains ownership of the property and, similar to other utility easements on private property, also retains responsibility for normal care and maintenance.

For example, the City of San Antonio will remove a blockage in a channel within a public drainage easement, but will not remove a standing tree on a channel bank outside of the conveyance area. Additionally, the City of San Antonio may not remove a blockage in the conveyance area until that blockage has the potential to significantly affect water flow. Other examples of normal care and routine

maintenance for owners includes, but is not limited to, litter collection, nuisance mowing, or other items that do not impede drainage. Examples of typical storm water conveyance maintenance undertaken by the City of San Antonio are managing significant overgrowth of vegetation (greater than 24-inches to 36-inches depending on grass species type), debris removal, channel restoration, and removal of downed trees in the conveyance area.

A. Maintenance of publicly owned facilities will be the responsibility of the city. Maintenance of private facilities is the responsibility of the property owner or the community association and must be specified in the maintenance schedule submitted to the city. A maintenance schedule for both publicly owned and privately owned facilities must be approved by the Director of TCI prior to the approval of construction drawings.

B. Authorized personnel from the City of San Antonio shall conduct periodic inspections of these facilities and structures. Any required repairs will be consistent with current construction standards. Maintenance issues identified by the city or state during inspections shall be the responsibility of the current owner.

C. An unobstructed access right-of-way connecting the drainage easement with an alley or roadway, parallel to or near the easement, shall be provided at a minimum spacing of one (1) access right-of-way at approximately one thousand (1,000) foot intervals. The access right-of-way shall be a minimum of fifteen (15) feet in width and shall be kept clear of obstructions that would limit maintenance vehicular access. Additional access points may be required if the flow line of the designed channel incorporates grade control structures of vehicular bridges that may block channel access to maintenance equipment. Channel design, earthen or concrete, shall have ramps in the side slopes near the access points that allow maintenance equipment to descend to the floor level of the channel. The maximum allowable ramp slope for vehicular access is seven to one (7:1). Access points adjacent to roadways or alleys shall be provided with a post and cable feature with padlock to prevent unauthorized use.

D. Design of new channels or alterations to existing channels shall consider future maintenance requirements. A maintenance schedule for any private channel shall be submitted to and approved by the Director of TCI prior to approval of construction plans. Maintenance requirements of concrete channels consist of de-silting activities, prevention of vegetation establishment in construction joints, and repair of concrete as necessary. Maintenance of earthen channels includes regular observation and repair, as necessary, of erosion, scouring, and removal of silt deposits, as necessary to maintain design parameters. Developers shall be responsible for maintaining newly planted channels until coverage is established throughout eighty-five percent (85%) of the area. This area shall include slopes, floor, and any attendant maintenance easement. New earthen channels shall be planted with drought resistant, low growth, native species grasses, which will allow unobstructed passage of floodwaters. Johnson grass, giant ragweed and other invasive species shall not be allowed to promulgate in channels. Suggested species shall include, but are not limited to, common bermuda, coastal bermuda, buffalo grass, sideoats grama, seep muhly, little bluestem, and indian grass. Channel design must accommodate for sufficient growth to maintain healthy and effective vegetative cover from the selected species. Mowing frequencies vary with the vegetation growth rates, but is required when the grass exceeds the design roughness coefficient of the channel.

4.13 - References

• City of San Antonio Development Services. *Interactive Development Process Manual.* City of San Antonio, San Antonio, Texas. Retrieved from http://www.sanantonio.gov/dsd/pdf/DPM/0_Coversheet_Intro.pdf

• City of San Antonio Department of Public Works. *Fee In-Lieu-Of (FILO) Program.* City of San Antonio, San Antonio, Texas, April 2013. Retrieved from http://www.sanantonio.gov/dsd/pdf/FILO_Final.pdf

CHAPTER 5 - HYDROLOGY

5.1 - Introduction

Hydrology is the study of water, its source, distribution, quantity, quality, and movement. For the purpose of this Storm Water Design Criteria Manual (SWDCM), the hydrology guidance will be limited to surface hydrology; the portion of the hydrologic cycle that deals specifically with precipitation, infiltration, and surface runoff.

This chapter describes the specific precipitation data which has been defined by federal and state agencies and regionalized to Bexar County. This chapter will also address infiltration and surface runoff by providing guidance on Methods of Analysis (Chapter 5.3) that range from small local analysis (i.e. Rational Method) to the hydrograph methods as well as guidance on probable maximum precipitation, with equation parameters specific for this region. The selection of these methods will be determined by drainage area size and purpose of the study. The proper application of these methods will generate discharge values that may be used for planning, design, mitigation, or regulation. Other methods of proven engineering use may be used with approval from the Director of TCI or his authorized representative.

5.2 - Method of Analysis

5.2.1 - Basin Delineation

A watershed or drainage basin is an area that drains storm water runoff to a designated point. Drainage basins are defined by its geographical terrain. The basin delineation is one of the most important parameters in the hydrologic model. When defining the basin boundary the design engineer should use the most recent topography data. In San Antonio and its ETJ, this may include:

- High accuracy LiDAR based contours, as generated by public or private agencies
- On-the-ground topographic survey data
- Historical topography maps, including USGS Quad. maps for pre-developed conditions
- Roadway construction plans
- Aerial Photos
- Underground infrastructure plans

The design engineer should follow standard engineering practice when delineating basin boundaries.

All basin delineation should consider previously defined drainage basins as found by the regions DFIRM data sets, Master Development Plans, or previous approved drainage studies. While the DFIRM data set was defined for the regions FEMA re-study, errors that may be found should be corrected. These basins can be accessed on-line at the San Antonio River Authority's Digital Data & Modeling Repository website (D2MR, website link may change, please refer to SARA staff for access to system).

Basin delineations defined by computer software should be reviewed carefully. Software including AutoCAD, Microstation, ESRI - GIS, and others have the capability to define basins. These basins are created by source data such as a Digital Elevation Model (DEM), a Triangular Irregular Network (TIN) or Raster grid files. The data set should be detailed enough to define the basin; it may require the use of break lines or fault lines to create certain features. Generally when DEM or Raster is used to generate basin delineation the resulting basin will create jagged or zigzagged basin boundary. The design engineer should verify that this resulting basin has the correct level of accuracy for the individual study.

5.2.2 - Selection of Rational or Hydrograph Method

For drainage areas less than 200 hundred (200) acres, the basis for computing runoff shall be the rational formula (as defined in Section 5.3) or some other method provided it is acceptable to the Director of TCI.

For drainage areas 200 hundred (200) acres or greater, the basis for computing runoff shall be a unit hydrograph method (as defined in Section 5.6), preferably the Soil Conservation Service (SCS) Dimensionless Unit Hydrograph method as contained in the U.S. Army Corps of Engineers Hydrologic Engineering Center HEC-HMS "Hydrologic Modeling Systems".

5.2.3 - Selection of Method for Detention Ponds

For detention ponds with drainage areas of twenty (20) acres or less, the basis for computing runoff shall be the modified rational method. When the drainage area of a detention pond is greater than twenty (20) acres the unit hydrograph method shall be used. The unit hydrograph method shall be used when multiple detention ponds within a watershed are being modeled, regardless of drainage area, unless approved by the Director of TCI.

5.3 - Rational Method

The Rational Method is appropriate for estimating peak discharge for small areas up to (200) acres with no significant flood storage. This method provides a peak discharge value but no time-series of flow or flow volume:

(Equation 5.3.1)

$$Q = C\ I\ A$$

Q = Peak Discharge (cfs)

C = Runoff coefficient

I = Average rainfall intensity (in./hr.)

A = Drainage area (acres)

Runoff coefficients (C) may need to be calculated as a weighted runoff coefficient where multiple values are present in one drainage area.

To determine the intensity (I) it is necessary to calculate the Time of Concentration (Tc). This value is used to identify the rainfall intensity found in Figures 5.5.1.A through Figures 5.5.1.E of this manual.

(Ord. No. 2019-04-11-0306 , § 1(Att. 1), 4-14-19)

5.4 - Time of Concentration

The following methods are recommended for time of concentration calculation:

(Equation 5.4)

$$T_c = T_t + T_{sc} + T_{ch}$$

T_c = Time of Concentration

T $_t$ = Sheet flow over plane surface

T $_{sc}$ = Shallow Concentrated Flow

T $_{ch}$ = Open Channel Flow

5.4.1 - Overland Flow

Flow over plane surfaces: Maximum allowable time is twenty (20) minutes. Minimum is five (5) minutes.

• The overland flow time chart from "Design" by Elwyn E. Seelye may be used to calculate overland flow times. Note that the minimum time has been reduced to five (5) minutes.

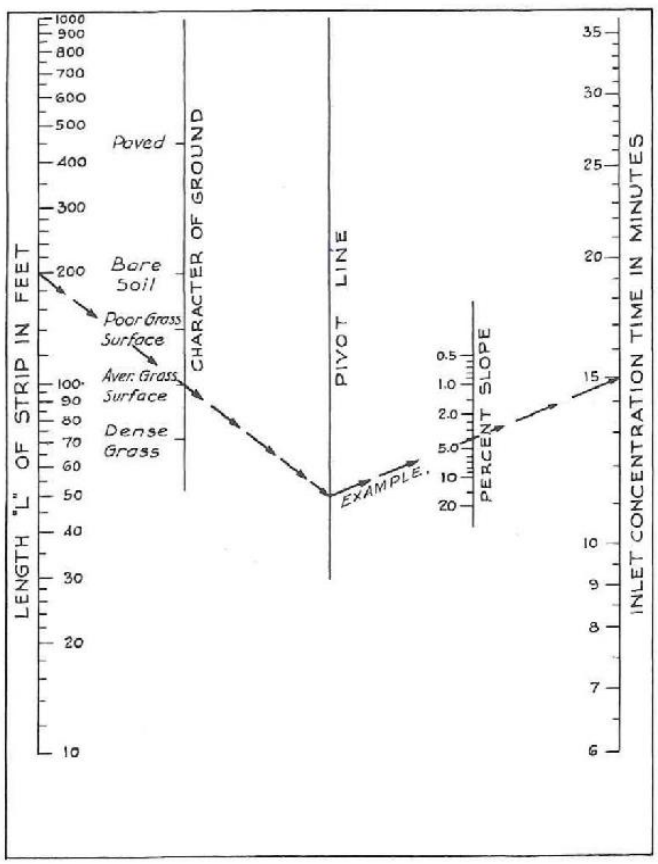

Figure 5.4.1 - Overland Flow Time *(Source: "DESIGN" by Elwyn Seelys Figure. H)*

• TR-55 "Urban Hydrology for Small Watersheds," SCS 1986 may be used, please consider the maximum (20 min.) and minimum (5 min.) when defining the flow length (L).

(Equation 5.4.1)

$$T_t = \frac{0.007(nL)^{0.8}}{(P_2)^{0.5} s^{0.4}}$$

T_t = travel time (hr.)
n = Manning's roughness coefficient
L = flow length (ft.)
P_2 = 2-year, 24-hour rainfall*
s = slope of hydraulic grade line (land slope, ft/ft)
*in San Antonio and its ETJ please use 4.44 inches for the two (2) -year, twenty-four (24)-hour rainfall value

Table 5.4.1 - Roughness Values for sheet flow

Roughness Coefficient (Manning's n) for sheet flow	
Surface Description	n [1]
Smooth surface (concrete, asphalt, gravel or bare soil)	0.011
Fallow (no residue)	0.05
Cultivated soils:	
Residue cover ≤ 20%	0.06
Residue cover > 20%	0.17
Grass:	
Short grass prairie	0.15
Dense grasses [2]	0.24
Bermudagrass	0.41
Range (natural)	0.13
Woods [3] :	
Light underbrush	0.40

Dense underbrush	0.80

1. *The n values are composite of information compiled by Engman (1968)*
2. *Included species such as weeping lovegrass, bluegrass, buffalo grass, blue gamma grass, and native grass mixtures*
3. *When selecting n, consider cover to a height of about 0.1 ft. This is the only part of the plant cover that will obstruct sheet flow.*

5.4.2 - Shallow Concentrated Flow

Overland flow usually becomes shallow concentrated flow after a maximum of three hundred (300) feet: Use Manning's equation to estimate travel time for defined swales, bar ditches, street sections, etc. or Figure 5.4.2 from TR-55 "Urban Hydrology for Small Watersheds," SCS 1986, may be used where a geometric section has not been defined.

(Equation: 5.4.2)

$$\mathbf{T}_{sc} = \frac{L_{sc}}{3600\ K\ S_{sc}^{0.5}}$$

T $_{sc}$ = shallow concentrated flow time (hr.)

L $_{sc}$ = shallow concentrated flow length (ft.)

K = 16.13 for unpaved surface; 20.32 for paved surface

S $_{sc}$ = shallow concentrated flow slope (ft./ft.)

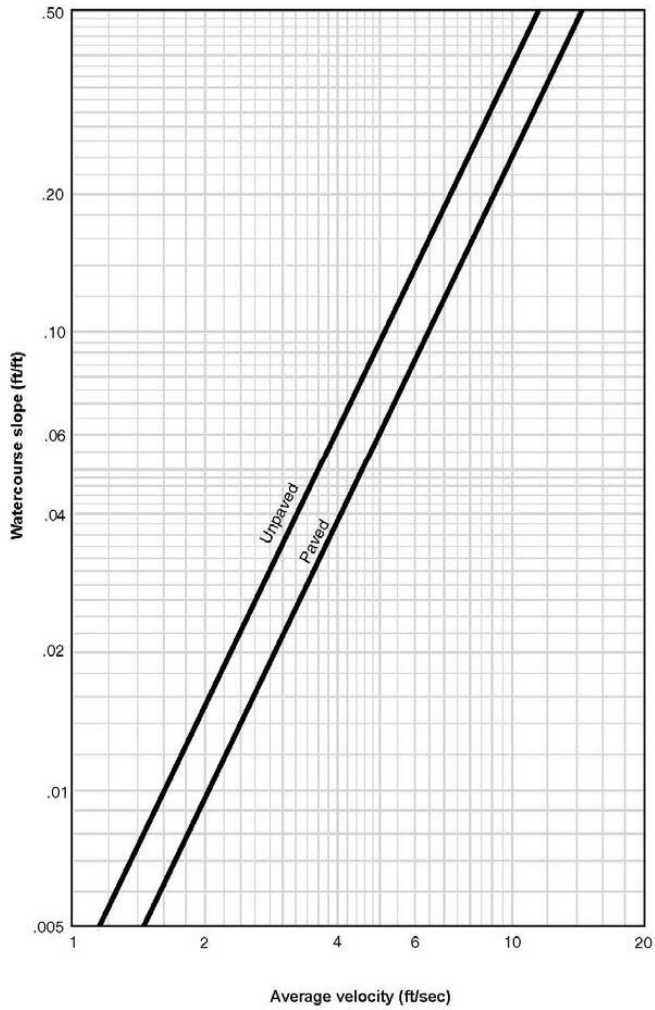

Figure 5.4.2 - Average Velocities for Estimating Travel Time for Shallow Concentrated Flow (Source: NRCS Technical Release 55 - Figure 3-1)

5.4.3 - Channel Flow

Use existing computer models where available or Manning's equation if the data is not available. When estimating the time of concentration, non-floodplain channel velocities for ultimate watershed development should not be less than six (6) fps.

(Equation 5.4.3)

$$T_{ch} = \frac{L_{ch}}{3600\ 1.49/n\ R^{2/3}\ S_{ch}^{1/2}}$$

T $_{ch}$ = channel flow time (hr.)

L $_{ch}$ = channel flow length (ft.)

S $_{ch}$ = channel flow slope (ft./ft.)

n = Manning's roughness coefficient

R = channel hydraulic radius (ft.) and is equal to a/P_w

a = cross sectional area ($ft.^2$)

$\mathbf{P}_w$ = wetted perimeter (ft.)

5.5 - Rainfall Data

Rainfall data in this section is based on NOAA Atlas 14, Volume 11 (A14) precipitation frequency estimates. A14 data indicates that precipitation depths vary across the region for each storm frequency. For the purposes of storm water and floodplain design and analysis, the region is broken into five (5) Precipitation Areas (PAs). Figure 5.5 shows the limits of each PA relative to Bexar County, major highways, and major watersheds. Properties within each respective PA will use the corresponding data from Tables 5.5.1.A-E and 5.5.2.1.A-E.

Refer to the San Antonio River Basin (SARB) Regional Modeling Standards for more information on how the A14 precipitation estimates were converted to Intensity-Duration-Frequency (IDF) and Depth-Duration-Frequency (DDF) tables. To complement Figure 5.5, the SARB Regional Modeling Standards indicate which sub-basins, streams, creeks, and tributaries fall within each PA. In the event that it is unclear whether a property or project is in a specific PA, contact the floodplain administrator for determination.

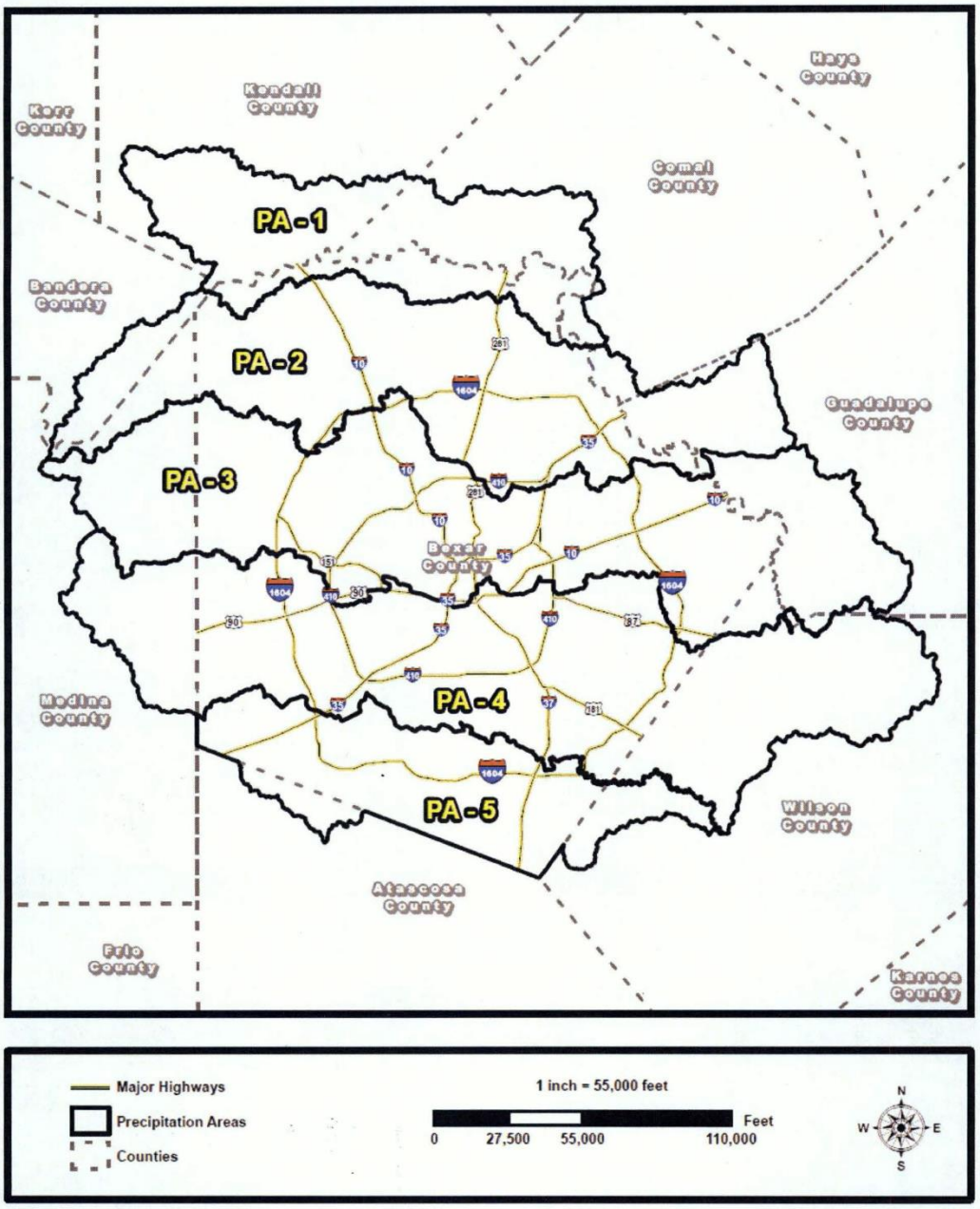

Figure 5.5 - Precipitation Area (PA) Map for Major San Antonio River Watersheds *(Precipitation Areas are available in GIS format at https://www.sanantonio.gov/GIS)*

(Ord. No. 2019-04-11-0306 , § 1(Att. 1), 4-14-19)

5.5.1 - Rainfall Intensity-Duration

Use Tables 5.5.1.A through 5.5.1.E to determine rainfall intensity.

Table 5.5.1.A - Intensity-Duration-Frequency (IDF) Values for PA-1

Time (minutes)	Atlas 14 Rainfall Intensity (inches/hour) by Storm Frequency						
	2-YEAR	5-YEAR	10-YEAR	25-YEAR	50-YEAR	100-YEAR	500-YEAR
5	6.34	7.96	9.31	11.22	12.72	14.26	18.19
6	5.98	7.53	8.81	10.64	12.06	13.53	17.14
7	5.70	7.17	8.40	10.16	11.52	12.91	16.30
8	5.45	6.87	8.05	9.74	11.04	12.37	15.58
9	5.24	6.61	7.73	9.36	10.60	11.88	14.95
10	5.05	6.36	7.44	9.00	10.20	11.43	14.38
11	4.87	6.13	7.17	8.66	9.82	11.00	13.85
12	4.70	5.92	6.91	8.34	9.46	10.59	13.35
13	4.54	5.71	6.67	8.03	9.11	10.19	12.88
14	4.39	5.51	6.43	7.73	8.77	9.81	12.43
15	4.24	5.32	6.20	7.44	8.44	9.43	11.99
16	4.10	5.14	5.99	7.18	8.14	9.10	11.57
17	3.98	4.98	5.80	6.95	7.88	8.80	11.20
18	3.86	4.84	5.63	6.75	7.64	8.53	10.86
19	3.76	4.71	5.47	6.56	7.42	8.29	10.56
20	3.66	4.58	5.33	6.39	7.22	8.07	10.28
21	3.58	4.47	5.20	6.23	7.04	7.86	10.03

22	3.50	4.37	5.08	6.08	6.87	7.67	9.79
23	3.42	4.27	4.96	5.95	6.71	7.50	9.57
24	3.35	4.18	4.86	5.82	6.57	7.34	9.37
25	3.28	4.10	4.76	5.70	6.43	7.19	9.18
26	3.22	4.02	4.67	5.59	6.31	7.04	9.01
27	3.16	3.94	4.58	5.49	6.18	6.91	8.84
28	3.10	3.87	4.49	5.39	6.07	6.78	8.68
29	3.05	3.81	4.42	5.29	5.96	6.66	8.53
30	3.00	3.74	4.34	5.20	5.86	6.55	8.39
31	2.95	3.68	4.27	5.11	5.76	6.44	8.25
32	2.90	3.62	4.20	5.03	5.67	6.33	8.12
33	2.85	3.56	4.13	4.95	5.58	6.23	8.00
34	2.81	3.51	4.07	4.88	5.49	6.14	7.88
35	2.77	3.45	4.01	4.80	5.41	6.05	7.77
36	2.72	3.40	3.95	4.73	5.33	5.96	7.66
37	2.68	3.35	3.89	4.66	5.25	5.87	7.55
38	2.65	3.30	3.83	4.60	5.18	5.79	7.45
39	2.61	3.25	3.78	4.53	5.11	5.71	7.35
40	2.57	3.21	3.73	4.47	5.04	5.63	7.26
41	2.53	3.16	3.68	4.41	4.97	5.56	7.17

42	2.50	3.12	3.63	4.35	4.90	5.48	7.08
43	2.46	3.08	3.58	4.29	4.84	5.41	6.99
44	2.43	3.04	3.53	4.24	4.78	5.34	6.90
45	2.40	3.00	3.48	4.18	4.72	5.28	6.82
46	2.36	2.96	3.44	4.13	4.66	5.21	6.74
47	2.33	2.92	3.39	4.08	4.60	5.15	6.66
48	2.30	2.88	3.35	4.02	4.54	5.08	6.58
49	2.27	2.84	3.31	3.97	4.48	5.02	6.51
50	2.24	2.80	3.27	3.92	4.43	4.96	6.43
51	2.21	2.77	3.22	3.88	4.38	4.90	6.36
52	2.18	2.73	3.18	3.83	4.32	4.84	6.29
53	2.15	2.70	3.14	3.78	4.27	4.79	6.22
54	2.12	2.66	3.11	3.73	4.22	4.73	6.15
55	2.10	2.63	3.07	3.69	4.17	4.68	6.08
56	2.07	2.59	3.03	3.64	4.12	4.62	6.02
57	2.04	2.56	2.99	3.60	4.07	4.57	5.95
58	2.01	2.53	2.95	3.56	4.02	4.51	5.89
59	1.99	2.49	2.92	3.51	3.98	4.46	5.82
60	1.96	2.46	2.88	3.47	3.93	4.41	5.76
120	1.21	1.55	1.85	2.29	2.64	3.03	4.13

180	0.90	1.16	1.40	1.77	2.07	2.41	3.37
360	0.53	0.69	0.85	1.09	1.30	1.54	2.21
720	0.30	0.40	0.50	0.64	0.77	0.92	1.35
1440	0.17	0.23	0.29	0.37	0.45	0.54	0.80

Table 5.5.1.B - Intensity-Duration-Frequency (IDF) Values for PA-2

Time (minutes)	Atlas 14 Rainfall Intensity (inches/hour) by Storm Frequency						
	2-YEAR	5-YEAR	10-YEAR	25-YEAR	50-YEAR	100-YEAR	500-YEAR
5	6.34	7.94	9.29	11.14	12.60	14.01	17.68
6	5.98	7.52	8.80	10.53	11.94	13.30	16.67
7	5.70	7.17	8.39	10.03	11.40	12.69	15.85
8	5.45	6.87	8.04	9.61	10.92	12.16	15.15
9	5.24	6.60	7.73	9.23	10.48	11.68	14.54
10	5.05	6.36	7.44	8.88	10.08	11.23	13.98
11	4.87	6.13	7.17	8.56	9.70	10.81	13.46
12	4.70	5.92	6.91	8.25	9.34	10.41	12.98
13	4.54	5.71	6.67	7.96	8.99	10.02	12.52
14	4.39	5.51	6.43	7.67	8.65	9.64	12.08
15	4.24	5.32	6.20	7.40	8.32	9.27	11.65

16	4.10	5.14	5.99	7.14	8.03	8.94	11.24
17	3.98	4.98	5.79	6.91	7.77	8.64	10.88
18	3.86	4.83	5.62	6.71	7.53	8.38	10.55
19	3.76	4.69	5.46	6.52	7.32	8.14	10.26
20	3.66	4.57	5.32	6.35	7.12	7.92	9.99
21	3.58	4.46	5.19	6.19	6.94	7.72	9.74
22	3.50	4.35	5.06	6.04	6.78	7.53	9.51
23	3.42	4.26	4.95	5.91	6.62	7.36	9.30
24	3.35	4.17	4.84	5.78	6.48	7.20	9.10
25	3.28	4.08	4.74	5.66	6.34	7.05	8.92
26	3.22	4.00	4.65	5.55	6.22	6.91	8.74
27	3.16	3.93	4.56	5.44	6.10	6.78	8.58
28	3.10	3.85	4.48	5.34	5.99	6.65	8.43
29	3.05	3.79	4.40	5.25	5.88	6.53	8.28
30	3.00	3.72	4.32	5.16	5.78	6.42	8.14
31	2.95	3.66	4.25	5.07	5.68	6.31	8.01
32	2.90	3.60	4.18	4.99	5.59	6.21	7.89
33	2.85	3.54	4.11	4.91	5.50	6.11	7.77
34	2.81	3.49	4.05	4.84	5.42	6.02	7.65
35	2.77	3.43	3.99	4.76	5.34	5.93	7.54

36	2.72	3.38	3.93	4.69	5.26	5.84	7.43
37	2.68	3.33	3.87	4.63	5.18	5.76	7.33
38	2.64	3.28	3.81	4.56	5.11	5.68	7.23
39	2.61	3.24	3.76	4.50	5.04	5.60	7.14
40	2.57	3.19	3.71	4.43	4.97	5.52	7.04
41	2.53	3.14	3.65	4.37	4.90	5.45	6.95
42	2.50	3.10	3.60	4.31	4.83	5.38	6.87
43	2.46	3.06	3.56	4.26	4.77	5.31	6.78
44	2.43	3.02	3.51	4.20	4.71	5.24	6.70
45	2.40	2.98	3.46	4.15	4.65	5.17	6.62
46	2.36	2.94	3.42	4.09	4.59	5.11	6.54
47	2.33	2.90	3.37	4.04	4.53	5.04	6.46
48	2.30	2.86	3.33	3.99	4.48	4.98	6.39
49	2.27	2.82	3.29	3.94	4.42	4.92	6.31
50	2.24	2.79	3.24	3.89	4.37	4.86	6.24
51	2.21	2.75	3.20	3.84	4.31	4.80	6.17
52	2.18	2.72	3.16	3.79	4.26	4.75	6.10
53	2.15	2.68	3.12	3.75	4.21	4.69	6.03
54	2.12	2.65	3.08	3.70	4.16	4.64	5.97
55	2.09	2.61	3.05	3.66	4.11	4.58	5.90

56	2.06	2.58	3.01	3.61	4.06	4.53	5.84
57	2.04	2.55	2.97	3.57	4.01	4.48	5.77
58	2.01	2.51	2.93	3.53	3.96	4.42	5.71
59	1.98	2.48	2.90	3.48	3.92	4.37	5.65
60	1.96	2.45	2.86	3.44	3.87	4.32	5.59
120	1.21	1.54	1.84	2.26	2.60	2.98	4.02
180	0.89	1.15	1.39	1.75	2.04	2.37	3.28
360	0.52	0.69	0.84	1.07	1.28	1.51	2.15
720	0.30	0.40	0.49	0.63	0.76	0.90	1.31
1440	0.17	0.23	0.28	0.36	0.44	0.52	0.77

Table 5.5.1.C - Intensity-Duration-Frequency (IDF) Values for PA-3

Time (minutes)	Atlas 14 Rainfall Intensity (inches/hour) by Storm Frequency						
	2-YEAR	5-YEAR	10-YEAR	25-YEAR	50-YEAR	100-YEAR	500-YEAR
5	6.30	7.88	9.20	11.00	12.36	13.79	17.20
6	5.95	7.45	8.73	10.43	11.75	13.08	16.21
7	5.66	7.11	8.33	9.95	11.24	12.49	15.41
8	5.42	6.81	7.98	9.54	10.78	11.97	14.74
9	5.21	6.54	7.67	9.17	10.35	11.49	14.14

10	5.02	6.30	7.38	8.82	9.96	11.05	13.60
11	4.85	6.08	7.11	8.50	9.58	10.64	13.10
12	4.68	5.86	6.85	8.19	9.22	10.24	12.62
13	4.53	5.66	6.60	7.89	8.87	9.85	12.17
14	4.38	5.47	6.36	7.60	8.53	9.48	11.74
15	4.24	5.28	6.12	7.32	8.20	9.12	11.33
16	4.10	5.10	5.91	7.07	7.91	8.79	10.93
17	3.97	4.94	5.72	6.84	7.66	8.50	10.58
18	3.86	4.80	5.55	6.63	7.42	8.24	10.26
19	3.75	4.66	5.40	6.45	7.21	8.00	9.97
20	3.66	4.54	5.26	6.28	7.02	7.79	9.71
21	3.57	4.43	5.13	6.12	6.84	7.59	9.46
22	3.49	4.33	5.01	5.98	6.68	7.41	9.24
23	3.41	4.23	4.90	5.84	6.53	7.24	9.04
24	3.34	4.14	4.79	5.72	6.39	7.08	8.84
25	3.27	4.06	4.70	5.60	6.26	6.93	8.66
26	3.21	3.98	4.60	5.49	6.13	6.80	8.50
27	3.15	3.90	4.52	5.38	6.02	6.66	8.34
28	3.09	3.83	4.43	5.28	5.91	6.54	8.19
29	3.04	3.76	4.35	5.19	5.80	6.42	8.04

30	2.98	3.70	4.28	5.10	5.70	6.31	7.91
31	2.93	3.64	4.21	5.01	5.60	6.21	7.78
32	2.89	3.58	4.14	4.93	5.51	6.11	7.66
33	2.84	3.52	4.07	4.85	5.43	6.01	7.54
34	2.79	3.47	4.01	4.78	5.34	5.92	7.43
35	2.75	3.41	3.95	4.71	5.26	5.83	7.32
36	2.71	3.36	3.89	4.64	5.18	5.74	7.22
37	2.67	3.31	3.83	4.57	5.11	5.66	7.12
38	2.63	3.26	3.78	4.50	5.04	5.58	7.02
39	2.59	3.22	3.72	4.44	4.97	5.50	6.93
40	2.55	3.17	3.67	4.38	4.90	5.43	6.84
41	2.52	3.13	3.62	4.32	4.83	5.35	6.75
42	2.48	3.08	3.57	4.26	4.77	5.28	6.66
43	2.45	3.04	3.52	4.20	4.70	5.21	6.58
44	2.41	3.00	3.48	4.15	4.64	5.15	6.50
45	2.38	2.96	3.43	4.09	4.58	5.08	6.42
46	2.35	2.92	3.39	4.04	4.52	5.02	6.35
47	2.32	2.88	3.34	3.99	4.47	4.96	6.27
48	2.28	2.84	3.30	3.94	4.41	4.89	6.20
49	2.25	2.81	3.26	3.89	4.36	4.83	6.13

50	2.22	2.77	3.21	3.84	4.30	4.78	6.06
51	2.19	2.73	3.17	3.79	4.25	4.72	5.99
52	2.16	2.70	3.13	3.74	4.20	4.66	5.92
53	2.13	2.66	3.09	3.70	4.15	4.61	5.85
54	2.11	2.63	3.05	3.65	4.10	4.55	5.79
55	2.08	2.59	3.02	3.61	4.05	4.50	5.72
56	2.05	2.56	2.98	3.56	4.00	4.45	5.66
57	2.02	2.53	2.94	3.52	3.95	4.39	5.60
58	1.99	2.49	2.90	3.47	3.90	4.34	5.54
59	1.97	2.46	2.87	3.43	3.86	4.29	5.48
60	1.94	2.43	2.83	3.39	3.81	4.24	5.42
120	1.19	1.52	1.81	2.22	2.55	2.90	3.88
180	0.88	1.14	1.37	1.71	1.99	2.30	3.15
360	0.51	0.67	0.82	1.05	1.24	1.46	2.06
720	0.29	0.39	0.48	0.61	0.73	0.86	1.25
1440	0.17	0.22	0.27	0.35	0.42	0.50	0.73

Table 5.5.1.D - Intensity-Duration-Frequency (IDF) Values for PA-4

Time (minutes)	Atlas 14 Rainfall Intensity (inches/hour) by Storm Frequency

	2-YEAR	5-YEAR	10-YEAR	25-YEAR	50-YEAR	100-YEAR	500-YEAR
5	6.30	7.85	9.14	10.92	12.24	13.65	16.83
6	5.94	7.40	8.66	10.36	11.62	12.96	15.87
7	5.66	7.05	8.26	9.89	11.11	12.37	15.09
8	5.42	6.75	7.92	9.48	10.65	11.85	14.43
9	5.21	6.48	7.61	9.11	10.23	11.38	13.84
10	5.02	6.24	7.32	8.76	9.84	10.95	13.31
11	4.84	6.02	7.05	8.43	9.47	10.54	12.82
12	4.68	5.81	6.79	8.12	9.12	10.14	12.36
13	4.53	5.61	6.55	7.82	8.78	9.76	11.92
14	4.38	5.42	6.31	7.53	8.44	9.39	11.49
15	4.24	5.24	6.08	7.24	8.12	9.03	11.09
16	4.10	5.06	5.87	6.99	7.84	8.71	10.70
17	3.97	4.91	5.68	6.76	7.58	8.42	10.35
18	3.86	4.76	5.51	6.56	7.35	8.16	10.04
19	3.75	4.63	5.36	6.37	7.14	7.93	9.75
20	3.65	4.51	5.22	6.21	6.95	7.71	9.50
21	3.57	4.40	5.09	6.05	6.78	7.52	9.26
22	3.48	4.30	4.97	5.91	6.61	7.34	9.04
23	3.41	4.21	4.86	5.77	6.46	7.17	8.84

24	3.33	4.12	4.75	5.65	6.32	7.01	8.65
25	3.27	4.04	4.65	5.53	6.19	6.86	8.47
26	3.20	3.96	4.56	5.42	6.07	6.73	8.31
27	3.14	3.88	4.48	5.32	5.95	6.60	8.15
28	3.08	3.81	4.39	5.22	5.84	6.48	8.00
29	3.03	3.74	4.31	5.13	5.74	6.36	7.87
30	2.98	3.68	4.24	5.04	5.64	6.25	7.73
31	2.93	3.62	4.17	4.96	5.55	6.14	7.61
32	2.88	3.56	4.10	4.87	5.45	6.04	7.49
33	2.83	3.50	4.03	4.80	5.37	5.95	7.37
34	2.79	3.45	3.97	4.72	5.28	5.86	7.26
35	2.74	3.39	3.91	4.65	5.20	5.77	7.16
36	2.70	3.34	3.85	4.58	5.13	5.68	7.05
37	2.66	3.29	3.80	4.51	5.05	5.60	6.96
38	2.62	3.25	3.74	4.45	4.98	5.52	6.86
39	2.58	3.20	3.69	4.39	4.91	5.44	6.77
40	2.55	3.15	3.64	4.33	4.84	5.37	6.68
41	2.51	3.11	3.59	4.27	4.78	5.30	6.59
42	2.47	3.07	3.54	4.21	4.71	5.23	6.51
43	2.44	3.02	3.49	4.15	4.65	5.16	6.43

44	2.40	2.98	3.44	4.10	4.59	5.09	6.35
45	2.37	2.94	3.40	4.04	4.53	5.02	6.27
46	2.34	2.90	3.35	3.99	4.47	4.96	6.20
47	2.31	2.86	3.31	3.94	4.41	4.90	6.12
48	2.27	2.83	3.26	3.89	4.36	4.84	6.05
49	2.24	2.79	3.22	3.84	4.30	4.78	5.98
50	2.21	2.75	3.18	3.79	4.25	4.72	5.91
51	2.18	2.71	3.14	3.75	4.20	4.66	5.84
52	2.15	2.68	3.10	3.70	4.15	4.61	5.78
53	2.12	2.64	3.06	3.65	4.09	4.55	5.71
54	2.10	2.61	3.02	3.61	4.04	4.50	5.65
55	2.07	2.57	2.98	3.56	4.00	4.44	5.58
56	2.04	2.54	2.95	3.52	3.95	4.39	5.52
57	2.01	2.51	2.91	3.48	3.90	4.34	5.46
58	1.98	2.47	2.87	3.43	3.85	4.29	5.40
59	1.96	2.44	2.84	3.39	3.81	4.24	5.34
60	1.93	2.41	2.80	3.35	3.76	4.19	5.28
120	1.18	1.51	1.79	2.19	2.51	2.85	3.76
180	0.87	1.13	1.36	1.69	1.95	2.25	3.05
360	0.51	0.67	0.81	1.03	1.21	1.41	1.98

720	0.29	0.38	0.47	0.60	0.71	0.83	11.19
1440	0.16	0.22	0.27	0.34	0.41	0.48	0.70

Table 5.5.1.E - Intensity-Duration-Frequency (IDF) Values for PA-5

Time (minutes)	Atlas 14 Rainfall Intensity (inches/hour) by Storm Frequency						
	2-YEAR	5-YEAR	10-YEAR	25-YEAR	50-YEAR	100-YEAR	500-YEAR
5	6.31	7.85	9.13	10.90	12.24	13.65	16.65
6	5.96	7.41	8.66	10.32	11.62	12.95	15.70
7	5.67	7.06	8.27	9.84	11.11	12.37	14.93
8	5.43	6.76	7.93	9.42	10.65	11.85	14.27
9	5.22	6.49	7.61	9.05	10.23	11.38	13.69
10	5.03	6.24	7.32	8.70	9.84	10.95	13.17
11	4.85	6.01	7.04	8.37	9.47	10.53	12.68
12	4.69	5.80	6.78	8.07	9.12	10.14	12.23
13	4.53	5.59	6.53	7.77	8.78	9.76	11.79
14	4.38	5.39	6.28	7.48	8.44	9.39	11.38
15	4.24	5.20	6.04	7.20	8.12	9.03	10.97
16	4.10	5.03	5.83	6.95	7.84	8.71	10.59
17	3.97	4.87	5.65	6.73	7.58	8.42	10.24

18	3.85	4.73	5.48	6.53	7.35	8.16	9.94
19	3.75	4.60	5.33	6.34	7.14	7.93	9.65
20	3.65	4.48	5.19	6.18	6.95	7.71	9.40
21	3.56	4.38	5.06	6.02	6.78	7.52	9.16
22	3.48	4.28	4.94	5.88	6.61	7.34	8.95
23	3.40	4.18	4.83	5.75	6.46	7.17	8.75
24	3.33	4.09	4.73	5.62	6.32	7.01	8.56
25	3.26	4.01	4.63	5.51	6.19	6.86	8.39
26	3.20	3.93	4.54	5.40	6.07	6.73	8.22
27	3.14	3.86	4.45	5.30	5.95	6.60	8.07
28	3.08	3.79	4.37	5.20	5.84	6.47	7.92
29	3.03	3.72	4.29	5.11	5.74	6.36	7.78
30	2.97	3.66	4.22	5.02	5.64	6.25	7.65
31	2.92	3.60	4.15	4.94	5.55	6.14	7.53
32	2.88	3.54	4.08	4.86	5.45	6.04	7.41
33	2.83	3.48	4.02	4.78	5.37	5.95	7.30
34	2.78	3.43	3.95	4.70	5.28	5.85	7.19
35	2.74	3.38	3.89	4.63	5.20	5.77	7.08
36	2.70	3.33	3.84	4.56	5.13	5.68	6.98
37	2.66	3.28	3.78	4.50	5.05	5.60	6.88

38	2.62	3.23	3.73	4.43	4.98	5.52	6.79
39	2.58	3.18	3.67	4.37	4.91	5.44	6.70
40	2.54	3.14	3.62	4.31	4.84	5.37	6.61
41	2.51	3.09	3.57	4.25	4.78	5.29	6.52
42	2.47	3.05	3.52	4.19	4.71	5.22	6.44
43	2.44	3.01	3.48	4.14	4.65	5.15	6.36
44	2.40	2.97	3.43	4.08	4.59	5.09	6.28
45	2.37	2.93	3.38	4.03	4.53	5.02	6.20
46	2.34	2.89	3.34	3.98	4.47	4.96	6.13
47	2.30	2.85	3.30	3.93	4.41	4.89	6.05
48	2.27	2.81	3.25	3.88	4.36	4.83	5.98
49	2.24	2.78	3.21	3.83	4.30	4.77	5.91
50	2.21	2.74	3.17	3.78	4.25	4.71	5.84
51	2.18	2.70	3.13	3.73	4.20	4.66	5.78
52	2.15	2.67	3.09	3.69	4.15	4.60	5.71
53	2.12	2.63	3.05	3.64	4.09	4.54	5.65
54	2.09	2.60	3.01	3.60	4.04	4.49	5.58
55	2.07	2.56	2.98	3.55	4.00	4.44	5.52
56	2.04	2.53	2.94	3.51	3.95	4.38	5.46
57	2.01	2.50	2.90	3.47	3.90	4.33	5.40

58	1.98	2.46	2.87	3.42	3.85	4.28	5.34
59	1.96	2.43	2.83	3.38	3.81	4.23	5.28
60	1.93	2.40	2.80	3.34	3.76	4.18	5.22
120	1.18	1.51	1.79	2.18	2.50	2.83	3.70
180	0.87	1.12	1.35	1.68	1.94	2.23	3.00
360	0.51	0.66	0.81	1.02	1.20	1.39	1.93
720	0.29	0.38	0.46	0.59	0.69	0.81	1.15
1440	0.16	0.21	0.26	0.33	0.40	0.46	0.66

(Ord. No. 2019-04-11-0306 , § 1(Att. 1), 4-14-19)

5.5.2 - Rainfall Depth-Duration-Frequency

5.5.2.1 - Design Rainfall

For the Design Rainfall, a twenty-four (24) hour rainfall distribution shall be applied for hydrograph based runoff calculations. Table 5.5.2.1 relates storm frequency terminology to annual exceedance probability. Rainfall intensities as adopted for the City of San Antonio are given in Tables 5.5.2.1.A through 5.5.2.1.E.

Refer to the SARB Regional Modeling Standards for more information related to rainfall distribution and hyetographs.

Table 5.5.2.1 - Design Storm Frequency vs. Annual Exceedance Probability (AEP)

	Design Storm Frequency							
	1-year	2-year	5-year	10-year	25-year	50-year	100-year	500-year
AEP	1.0	0.5	0.2	0.1	0.04	0.02	0.01	0.002

Table 5.5.2.1.A - Depth-Duration-Frequency (DDF) Values for PA-1

Atlas 14, Volume 11 Adjusted Rainfall Values (pre-areal reduction)								
Duration	Design Storm Depth (inches) by Storm Frequency							
	1-year	2-year	5-year	10-year	25-year	50-year	100-year	500-year
5 minute	0.45	0.53	0.66	0.78	0.94	1.06	1.19	1.52
10 minute	0.71	0.84	1.06	1.24	1.50	1.70	1.90	2.40
15 minute	0.90	1.06	1.33	1.55	1.86	2.11	2.36	3.00
30 minute	1.27	1.50	1.87	2.17	2.60	2.93	3.27	4.19
1 hour	1.65	1.96	2.46	2.88	3.47	3.93	4.41	5.76
2 hour	1.98	2.42	3.09	3.69	4.57	5.28	6.07	8.26
3 hour	2.15	2.69	3.48	4.21	5.30	6.21	7.24	10.10
6 hour	2.46	3.16	4.15	5.09	6.54	7.80	9.23	13.26
12 hour	2.78	3.62	4.80	5.94	7.70	9.25	11.02	16.23
24 hour	3.11	4.10	5.49	6.85	8.93	10.76	12.88	19.12

Table 5.5.2.1.B - Depth-Duration-Frequency (DDF) Values for PA-2

Atlas 14, Volume 11 Adjusted Rainfall Values (pre-areal reduction)								
Duration	Design Storm Depth (inches) by Storm Frequency							
	1-year	2-year	5-year	10-year	25-year	50-year	100-year	500-year
5 minute	0.45	0.53	0.66	0.77	0.93	1.05	1.17	1.47
10 minute	0.71	0.84	1.06	1.24	1.48	1.68	1.87	2.33

15 minute	0.90	1.06	1.33	1.55	1.85	2.08	2.32	2.91
30 minute	1.28	1.50	1.86	2.16	2.58	2.89	3.21	4.07
1 hour	1.65	1.96	2.45	2.86	3.44	3.87	4.32	5.59
2 hour	1.97	2.41	3.08	3.67	4.52	5.20	5.95	8.03
3 hour	2.14	2.67	3.46	4.18	5.24	6.12	7.10	9.84
6 hour	2.44	3.13	4.11	5.05	6.45	7.66	9.04	12.90
12 hour	2.76	3.58	4.75	5.87	7.58	9.06	10.76	15.73
24 hour	3.10	4.04	5.44	6.76	8.74	10.45	12.47	18.45

Table 5.5.2.1.C - Depth-Duration-Frequency (DDF) Values for PA-3

Atlas 14, Volume 11 Adjusted Rainfall Values (pre-areal reduction)								
Duration	Design Storm Depth (inches) by Storm Frequency							
	1-year	2-year	5-year	10-year	25-year	50-year	100-year	500-year
5 minute	0.45	0.53	0.66	0.77	0.92	1.03	1.15	1.43
10 minute	0.71	0.84	1.05	1.23	1.47	1.66	1.84	2.27
15 minute	0.90	1.06	1.32	1.53	1.83	2.05	2.28	2.83
30 minute	1.28	1.49	1.85	2.14	2.55	2.85	3.16	3.96
1 hour	1.64	1.94	2.43	2.83	3.39	3.81	4.24	5.42
2 hour	1.96	2.38	3.04	3.62	4.44	5.10	5.81	7.75
3 hour	2.12	2.64	3.43	4.11	5.14	5.98	6.91	9.46

6 hour	2.42	3.08	4.05	4.95	6.31	7.45	8.74	12.36
12 hour	2.73	3.53	4.66	5.73	7.36	8.76	10.36	14.99
24 hour	3.07	3.96	5.31	6.56	8.46	10.06	12.00	17.51

Table 5.5.2.1.D - Depth-Duration-Frequency (DDF) Values for PA-4

Atlas 14, Volume 11 Adjusted Rainfall Values (pre-areal reduction)								
Duration	Design Storm Depth (inches) by Storm Frequency							
	1-year	2-year	5-year	10-year	25-year	50-year	100-year	500-year
5 minute	0.45	0.53	0.65	0.76	0.91	1.02	1.14	1.40
10 minute	0.71	0.84	1.04	1.22	1.46	1.64	1.82	2.22
15 minute	0.91	1.06	1.31	1.52	1.81	2.03	2.26	2.77
30 minute	1.28	1.49	1.84	2.12	2.52	2.82	3.12	3.87
1 hour	1.64	1.93	2.41	2.80	3.35	3.76	4.19	5.28
2 hour	1.95	2.37	3.02	3.58	4.38	5.02	5.70	7.51
3 hour	2.12	2.62	3.38	4.07	5.06	5.86	6.75	9.14
6 hour	2.41	3.05	4.01	4.88	6.18	7.27	8.49	11.87
12 hour	2.70	3.47	4.57	5.61	7.18	8.49	10.00	14.33
24 hour	3.02	3.91	5.16	6.40	8.20	9.75	11.49	16.70

Table 5.5.2.1.E - Depth-Duration-Frequency (DDF) Values for PA-5

Atlas 14, Volume 11 Adjusted Rainfall Values (pre-areal reduction)								
Duration	Design Storm Depth (inches) by Storm Frequency							
	1-year	2-year	5-year	10-year	25-year	50-year	100-year	500-year
5 minute	0.45	0.53	0.65	0.76	0.91	1.02	1.14	1.39
10 minute	0.71	0.84	1.04	1.22	1.45	1.64	1.82	2.19
15 minute	0.91	1.06	1.30	1.51	1.80	2.03	2.26	2.74
30 minute	1.28	1.49	1.83	2.11	2.51	2.82	3.12	3.83
1 hour	1.64	1.93	2.40	2.80	3.34	3.76	4.18	5.22
2 hour	1.95	2.36	3.01	3.57	4.36	4.99	5.67	7.41
3 hour	2.12	2.61	3.37	4.05	5.03	5.82	6.69	8.99
6 hour	2.41	3.04	3.98	4.85	6.12	7.18	8.36	11.60
12 hour	2.70	3.44	4.53	5.53	7.06	8.31	9.75	13.83
24 hour	3.01	3.86	5.12	6.25	8.02	9.50	11.14	15.94

(Ord. No. 2019-04-11-0306 , § 1(Att. 1), 4-14-19)

5.5.2.2 - Areal Reduction Factor

Calculated storm water runoff at a given point may be reduced by factors shown in Table 5.5.2.2 based on the tributary area (in square miles) draining to said point.

Table 5.2.2.2 - Areal Reduction Factors

Areal Reduction Factors** (for use in calculating Point Rainfall for Bexar County)	
Area (sq mi)	Base ARF for Area

10	0.855
25	0.79
50	0.76
100	0.73
175	0.71
300	0.67

*** Source: San Antonio River Basin Regional Modeling Standards, on file with the San Antonio River Authority*

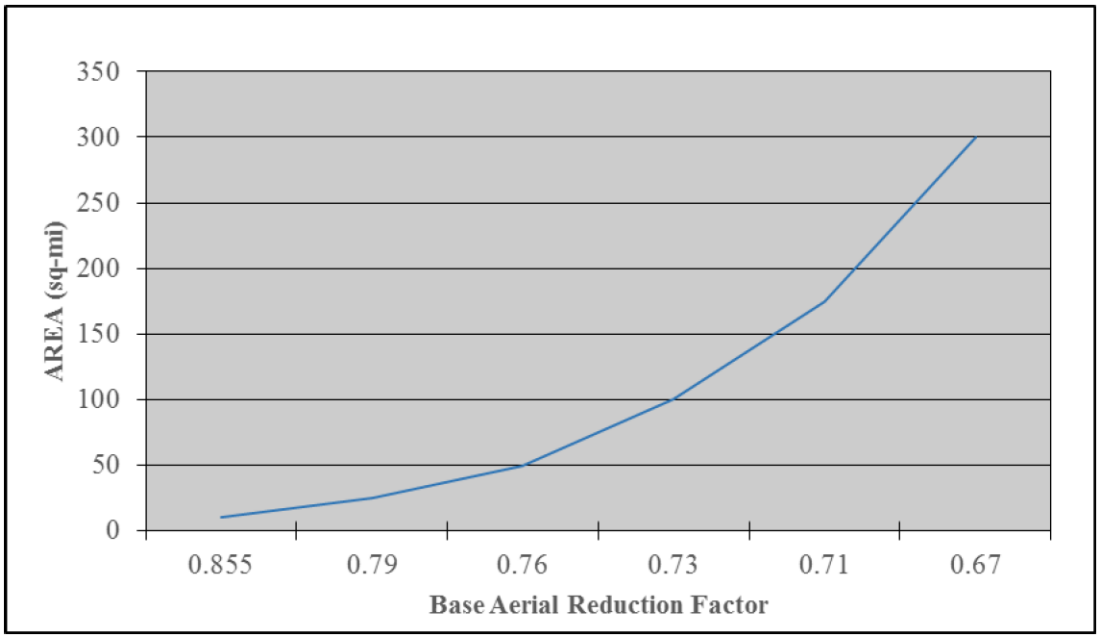

(Ord. No. 2019-04-11-0306 , § 1(Att. 1), 4-14-19)

5.5.3 - Runoff Coefficient

Runoff coefficients (C value) for use in the rational formula shall not be less than the values shown in Table 5.5.3A, as appropriate

Table 5.5.3A - Runoff Coefficient (C value) - percentage

Character of Area	SLOPE			
	Up to 1%	Over 1% up to 3%	Over 3% up to 5%	Over 5%
Business or commercial areas (90% or more impervious), Existing Pavement / Buildings or Zoning Districts O, C, I-1, I-2	95	96	97	97
Densely developed areas (80% to 90% impervious) or Zoning Districts D, MX, NC, TOD, Use Pattern TND	85	88	91	95
Closely built residential areas and school sites or Zoning Districts MF, R-4	75	77	80	84
Undeveloped areas * - Present land is undeveloped and ultimate land use is unknown. C values for use in ultimate development calculations.	68	70	72	75
Large lot residential area or Zoning Districts R20, RE	55	57	62	64
Undeveloped areas * - Existing conditions.				
Average residential area or Zoning Districts R-5, R-6	65	67	69	72
Cultivated or Range (Grass Cover < 50% of Area)	44	47	53	55
Range (Grass Cover 50—75% of Area)	37	41	49	53
Forest or Range (Grass Cover > 75% of Area)	35	39	47	52

**Areas included within parks, green belts, or regulatory floodplains shall be considered to remain undeveloped per this table*

5.6 - Hydrograph Method

5.6.1 - Sub-Basin

5.6.1.1 - Loss Method

5.6.1.1.1 SCS Curve Number Loss

The SCS curve numbers adopted for use by the City of San Antonio are shown in Table 5.6.1.1.1.1. The hydrologic soil groups are listed in the latest version of the United States Natural Resources Conservation Service [formerly the Soil Conservation Service], "Urban Hydrology for Small Watersheds," Technical Release No. 55 (TR 55); this document is hereby incorporated by this reference. Soil types that relate to the hydrologic soil group may be found in the latest version of the United States Natural Resources Conservation Service "Soil Survey-Bexar County, Texas;" this document is hereby incorporated by this reference. Soil types may also be based on a Geotechnical Engineering Report.

Table 5.6.1.1.1.1 - SCS Curve Number by Soil Type

Cover Description	Hydrologic Condition	Curve Number (CN) for Hydrologic Soil Group			
		A	B	C	D
Open space (lawns, parks, golf courses, cemeteries, etc.)	Good	39	61	74	80
Meadow (continuous grass, protected from grazing and generally mowed for hay)		30	58	71	78
Brush (brush-weed-grass mixture with brush the major element)	Good	30	48	65	73
Woods	Good	30	55	70	77

Table 5.6.1.1.1.2 - Percent Impervious Cover by Land Use

Land Use Category		Average Percent Impervious Cover
Residential	1/8 acre Residential Lots, or Garden or townhouse apartments, or Zoning Districts R-4, R-5, RM-4, RM-5; TND/TOD Use Patterns	65—85
	¼ acre Residential Lots or Zoning District R-6, RM-6	38
	1/3 acre Residential Lots or Zoning District R-15	30
	½ acre Residential Lots or Zoning Districts R-20	25
	1 acre Residential Lots or Zoning Districts RP, RE	20
Industrial or Zoning Districts L, I-1, I-2		72—85
Business or Commercial, or Zoning Districts NC, O, C		85—95

Densely developed (apartments), or Zoning Districts MF	65—85
Streets, Roads, and Parking Areas	98

5.6.1.2 - Transform Method

5.6.1.2.1 SCS Unit Hydrograph

A method developed by the Natural Resource Conservation Service (formally known as the Soil Conservation Service) for constructing unit hydrographs. This method is based on empirical data from small agriculture watersheds across the United States. For the SCS method, antecedent moisture condition II shall be used in the runoff model. Design rainfall values listed in Table 5.5.2.1 shall be used for hydrograph calculations. The method requires the determination of the SCS lag time and time to peak, the peak discharge is calculated by the following equation:

(Equation 5.6.1.2a)

$$Q_p = \frac{484\ A}{t_p}$$

Q $_p$ = peak discharge (cfs.)
A = drainage area (mi. ^{2})
t $_p$ = time to peak (hr.)

(Equation 5.6.1.2b)

$$t_p = \frac{\Delta t}{2} + t_{lag}$$

t $_p$ = time to peak (hr.)
Δ **t** = the duration of rainfall (hr.) = 0.133 t $_c$
t $_{lag}$ = lag time from the centroid of rainfall to peak discharge, estimated at 0.6 t $_c$ (hr.)

Table 5.6.1.2.1 - SCS Dimensionless Unit Coordinates

Coordinates of SCS Dimensionless unit hydrograph			
t/t $_p$	Q/Q $_p$	t/t $_p$	Q/Q $_p$
0	0	1.4	0.750
0.1	0.015	1.5	0.660

0.2	0.075	1.6	0.560
0.3	0.160	1.8	0.420
0.4	0.280	2.0	0.320
0.5	0.430	2.2	0.240
0.6	0.600	2.4	0.180
0.7	0.770	2.6	0.130
0.8	0.890	2.8	0.098
0.9	0.970	3.0	0.075
1.0	1.000	3.5	0.036
1.1	0.980	4.0	0.018
1.2	0.920	4.5	0.009
1.3	0.840	5.0	0.004

5.6.1.2.2 Snyder Unit Hydrograph

The Synder Unit Hydrograph is a method developed from analysis of ungauged watersheds in the Appalachian Highlands in the United States. Required parameters are the standard lag (hr.) and the peaking coefficient.

(Equation 5.6.1.2.2a)

$$\mathbf{Q}_p = \frac{640\ C_p\ A}{t_{lag}}$$

Q_p = Snyder peak discharge (cfs.)
C_p = peaking coefficient; range from 0.5 - 0.9
A = Drainage Area (mi. ^{2})
t_{lag} = Snyder lag time (hr.)

(Equation 5.6.1.2.2b)

$$T_{lag} = C_t \left(\frac{LL_{ca}}{\sqrt{S}}\right)^{0.33}$$

T_{lag} = Snyder lag time (hr.)
C_t = basin coefficient based on the level of development in the watershed
L = length of the main stream from the outlet to the watershed divide
L_{ca} = length of the centroid along the flow path
S = Slope of the longest path (L)

(Equation 5.6.1.2.2c)

$$C_t = 1.4224e^{-0.0088x}$$

x = the percentage of development

Note: Typically C_t range for this area is 1.1 to 1.4.

5.6.1.2.3 Clark Unit Hydrograph

The Clark Unit Hydrograph is derived by two major parameters; the translation or movement of runoff and the attenuation or reduction of runoff as it moves through the watershed. These two parameters are defined at its basis with the following equation:

(Equation: 5.6.1.2.3)

$$\frac{dS}{dt} = I_t - O_t$$

$\frac{dS}{dt}$	= time rate of change in storage at time ($_t$)
I_t	= average inflow at time ($_t$)
O_t	= outflow from storage at time ($_t$)

To use this method in HEC-HMS the parameters of translation and attenuation are defined by the watersheds time of concentration (t_c) and Basin Storage coefficient (R).

- **The Translation** is derived by the time of concentration (t_c), and is defined by Equation 5.4 in this manual, the TR-55 method of calculation. The t_c is provided as a unit of time in hours (hr.)

- **The Attenuation** is the Basin Storage coefficient (R), a measure of the storage within the individual watershed. The larger the R value, the larger the attenuation. This value can be defined by calibration. R is given as a unit of time (hr.)

5.6.1.3 - Baseflow Method

5.6.1.3.1 None

For a majority of the perennial streams in San Antonio and its ETJ, the hydrology models will not account for any base flow condition. It is recommended that the design engineer visit the study stream to observe average conditions.

5.6.1.3.2 Constant Monthly Baseflow

As defined in the HEC-HMS technical Manual of March 2000 "[the base flow parameter is] best estimated empirically, with measurements of channel flow when storm runoff is not occurring. In the absence of such records, field observation may help establish the average flow&hellipfor most urban channels and for smaller streams in the western and southwestern US, the baseflow contribution may be negligible."

5.6.2 - Reach - Routing

Routing of the runoff hydrograph through the channel from one (1) subarea calculation point to the next in the HEC-HMS shall be computed using one (1) of the methods listed below.

Channel routing methodologies that are currently being applied in the existing HEC-HMS model of the watershed shall not be replaced with a different methodology without approval or direction from the Director of TCI.

For use in routing methods, Manning's roughness coefficients ("N" values) shall be consistent with the values listed in Table 9.2.4.1

(Equation: 5.6.2)

$$I - O = \frac{dS}{dt}$$

$\frac{dS}{dt}$	= time rate of change in storage at time t
I	= average inflow
O	= outflow from storage

5.6.2.1 - Muskingum

If overbank/channel storage not significant, use Muskingum/normal depth channel routing.

5.6.2.2 - Muskingum-Cunge 8 Point Cross Section

If overbank/channel storage is not significant and a hydraulic model is not available, use the Muskingum-Cunge eight (8) point cross section Method.

5.6.2.3 - Modified Puls

Use the Modified Puls Storage Method where a hydraulic model is available to develop storage/out flow relationship.

5.6.2.4 - Kinematic Wave

The Kinematic Wave Method for channel reaches where inflow from overbank runoff or multiple point sources (Example: storm drain outfalls) is significant and where hydrograph attenuation is insignificant.

5.7 - Probable Maximum Flood

For information on calculating the Probable Maximum Flood (PMF), please refer to the National Oceanic and Atmospheric Administration (NOAA) Hydro-meteorological Report (HMR) 51 & 52 and the various USGS report for the probable maximum flood peak discharges in Texas. When defining the PMF please contact the City of San Antonio TCI staff and also refer to the Texas Commission on Environmental Quality (TCEQ) Dam Safety program for additional guidance.

5.8 - References

- Chow, Ven Te. (Jan. 2009). *Open-Channel Hydraulics - McGraw-Hill civil engineering series.* Caldwell, NJ: Reprint by Blackburn Press.

- NOAA. *NOAA Atlas 14 Precipitation-Frequency Atlas of the United States; Volume 11, Version 2.0: Texas.* U.S. Department of Commerce, National Oceanic and Atmospheric Administration, National Weather Service, Silver Spring, Maryland, 2018.

- Snyder, Franklin F., 1938, *Synthetic unit-graphs:* Am Geophys. Union Trans., Pt. I, p. 447-454.

- Sandrana, Shiva, P.E., PH., CFM. (Jan. 2011). *IDF curves for Bexar County* . Technical Memo, Bexar County Infrastructure Services - Flood Control Division.

- PBS&J. (May 2005). *Technical Memorandum: Snyder Unit Hydrograph Parameter Guidelines* - San Antonio River Basin, Regional Watershed Modeling System.

- USDA. *Urban Hydrology for Small Watersheds - Technical Release No. 55.* U.S. Department of Agriculture, Natural Resources Conservation Service, Conservation Engineering Division, June 1986.

- TXDOT. Hydrology. Chapter 4 in *Hydraulic Design Manual* . Texas Department of Transportation, Revised 2011. (Accessed April 2014)

- USACE. *HEC-RAS River Analysis System - Hydraulic Reference Manual Version 4.1.* U.S. Army Corp of Engineers, Hydrologic Engineering Center, Davis, California, Jan. 2010.

- Seelye, Elwyn E. (1960) *Data Book for Civil Engineers: Design Vol. 1* (3 rd ed.). New York, NY: John Wiley and Sons, Inc.

- San Antonio River Authority. (September 2013) *San Antonio River Basin Regional Modeling Standards for Hydrology and Hydraulic Modeling* .

(Ord. No. 2019-04-11-0306 , § 1(Att. 1), 4-14-19)

CHAPTER 6 - PAVEMENT DRAINAGE

6.1 - Introduction

The design of new streets and the improvement of existing streets shall consider public safety and limit potential conflicts between storm water conveyance, vehicular traffic, parking, pedestrian access, ADA requirements, and bicycle traffic. Storm water conveyance on streets shall be designed to account for the cumulative impact of peak flows and runoff volumes on the system as the storm water progresses downgrade.

Potential flooding problems or conflicts at connection points where new or modified drainage systems (including streets, storm drains, etc.) and existing portions of the downstream street system and storm water conveyance system shall be identified and resolved, either in the design of the new or modified drainage system or in modifications to the existing system. Appropriate longitudinal and cross slope serve to move any accumulated water off the roadway as quickly and effectively as possible.

Where proposed streets cross existing or proposed watercourses, all-weather crossings shall be required. Culverts or bridges shall be adequate to allow passage of the design storm identified in Chapters 10.3.1 and 11.3.1.

6.2 - Design Guidelines

6.2.1 - Design Frequency and Spread

Streets draining a watershed greater than one hundred (100) acres must be designed for the 100-year ultimate design frequency storm. Street width shall not be widened beyond the width as determined by the street classification for drainage purposes. The width of pavement, maximum and minimal longitudinal street grades, and maximum and minimum pavement cross slopes shall follow UDC 35-506 Transportation and Street Design based on their street classifications.

6.2.1.1 - Street Classification - Primary and Secondary Arterial Streets

An Arterial Street is a street designated on the current major thoroughfare plan. One (1) lane in each direction on arterial streets shall remain passable with a flow depth not to exceed 0.30 feet in the passable lane during a twenty-five (25)-year ultimate storm event or the one hundred (100) year ultimate if the street drains a watershed greater than one hundred (100) acres. The maximum depth of water in the street section must not exceed seven (7) inches (the height of a standard city curb).

The Roadway Spread, also known as ponding width, is dependent on the depth of water at the curb, longitudinal slope, cross slope, and roadway pavement material.

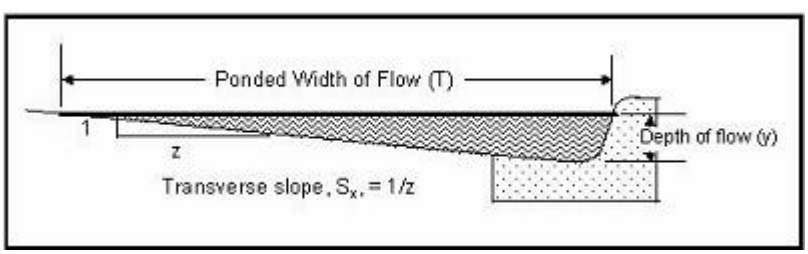

Figure 6.2.1.1 - Gutter Flow (Source TxDOT, 2000)

The depth of flow in a gutter section with a longitudinal slope (S) is taken as the uniform (normal) depth of flow. Manning's Equation is used as a basis for this determination. Ordinarily, it would not be possible to solve for uniform depth of flow directly from Manning's Equation. For Equation 6.2, the portion of wetted

perimeter represented by the vertical (or near-vertical) face of the curb is ignored. This is a justifiable expedient which does not appreciably alter the resulting estimate of depth of flow in the curb section.

(Equation 6.2)

$$y=1.243(QnS_x / S^{1/2})^{3/8}$$

y = depth of water in the curb section (ft.)
Q = gutter flow rate (cfs.)
n = Manning's roughness coefficient
S = longitudinal slope (ft./ft.)
$\mathbf{S}_x$ = pavement cross slope (ft./ft.)

6.2.1.2 - Street Classification - Local "B" and Collector Streets

A maximum flow depth to the top of curb on a standard Local "B" and Collector Street section will be allowed during a twenty-five (25)-year ultimate storm event. A Collector Street is a street with a width of forty-four (44) feet or more and not shown as an Arterial Street on the current major thoroughfare plan.

6.2.1.3 - Street Classification - Local "A" Streets

Local "A" streets shall be designed on a basis of a five-year ultimate frequency. A twenty-five-year ultimate frequency storm must be contained within the street right-of-way.

6.2.1.4 - Street Classification - Alleys

Alleys shall be designed for five (5)-year ultimate frequency within the limits of the alley pavement/curbs, and twenty-five (25)-year ultimate frequency within the right-of-way or easement to carry storm water.

6.2.1.5 - Street Classification - Traditional Street Design

Traditional street design shall conform to the storm frequency requirements of the standard street designs listed above as follows:

- Trails, Alleys, and Lanes - Use alley design criteria.
- Local Street or Avenue - Use Local "A" street design criteria.
- Main Street - Use Local "A," Local "B," or Collector Street design criteria depending on the pavement width. Use Local "A" criteria where pavement width is less than thirty-four (34) feet.
- Boulevard or Parkway - Use Arterial Street design criteria.
- A County section with no curbs and with bar ditches - Design street section to contain the twenty five (25)-year ultimate frequency storm within the right-of-way.

6.2.2 - Street Capacity

Streets may be used for storm water drainage only if the calculated storm water flow does not exceed the maximum flow depth and velocity allowable for the streets roadway classification as outlined above.

Where streets are not capable of carrying their design criteria storm water discharge inlets or curb openings are then required. The inlets or openings will discharge into a drainage channel or storm drain system. If there is not one available, one shall be provided. Partial flow past the inlet will be allowed when the capacity of all downstream street systems can accommodate the flow. The Inlets and Storm Drain System design criteria requirements are outlined in Chapters 7 and 8.

Curb cuts for driveways on all streets shall be designed for compatibility with the storm water conveyance function of streets. The design criteria maximum frequency must be contained within the right-of-way. Considerations will be given to cross streets as well as drive ways draining to streets.

Where Dwelling units are located on the downhill side of a T-intersection, Cul-de-sac, or knuckle with a street or drainage channel discharging onto it, the street intersection shall be graded so to avoid water flowing over the curb and out of the right-of-way. Detailed calculations will be required at these locations to show that the discharges are contained within the right-of-way.

No flow capacity tables are provided for the traditional street designs due the variety of geometric properties associated with these streets. When proposing street designs, drainage calculations specific to a proposed street design must be submitted for approval.

Table 6.2.2.1 - Manning's Roughness Coefficient

Pavement Description	Manning's "n" Value
Concrete Pavement (wood float type surface finish)	0.015
Asphalt Pavement	0.018

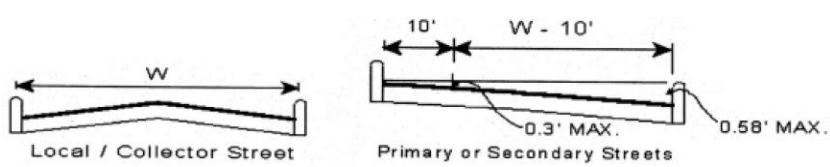

Slope	28' Pvm't Width c=.28' wp=29.16 A=12.32 r=0.42		30' Pvm't Width c=0.3' wp=31.16 A=12.9 r=0.41		40' Pvm't Width c=0.4' wp=41.16 A=15.2 r=0.37		44' Pvm't Width c=0.44' wp=45.16 A=15.84 r=0.35		Secondary with Median 24' Pvm't wp=24.68 A=8.16 r=0.33		Primary (w/o & w/) Median 36' Pvm't wp=29.58 A=8.41 r=0.28	
	Q(cfs)	Vel.	Q(cfs)	Vel.	Q(cfs)	Vel.	Q(cfs)	Vel.	Q(cfs)	Vel.	Q(cfs)	Vel.
0.40	36.22	2.94	37.41	2.90	40.85	2.69	41.13	2.60	20.37	2.50	18.99	2.26
0.45	38.42	3.12	39.68	3.08	43.33	2.85	43.63	2.75	21.61	2.65	20.14	2.39

0.50	31.07	2.52	41.83	3.24	45.67	3.00	45.99	2.90	22.78	2.79	21.23	2.52
0.55	42.47	3.45	43.87	3.40	47.90	3.15	48.23	3.05	23.89	2.93	22.26	2.65
0.60	44.36	3.60	45.82	3.55	50.03	3.29	50.38	3.18	24.95	3.06	23.25	2.76
0.65	46.17	3.75	47.69	3.70	52.07	3.43	52.44	3.31	25.97	3.18	24.20	2.88
0.70	47.91	3.89	49.49	3.84	54.04	3.56	54.41	3.44	26.95	3.30	25.12	2.99
0.75	49.59	4.03	51.23	3.97	55.94	3.68	56.32	3.56	27.90	3.42	26.00	3.09
0.80	51.22	4.16	52.91	4.10	57.77	3.80	58.17	3.67	28.81	3.53	26.85	3.19
0.85	52.80	4.29	54.54	4.23	59.55	3.92	59.96	3.79	29.70	3.64	27.68	3.29
0.90	54.33	4.41	56.12	4.35	61.28	4.03	61.70	3.90	30.56	3.74	28.48	3.39
0.95	55.82	4.53	57.66	4.47	62.96	4.14	63.39	4.00	31.40	3.85	29.26	3.48
1.00	57.27	4.65	59.16	4.59	64.59	4.25	65.04	4.11	32.21	3.95	30.02	3.57
1.50	70.14	5.69	72.45	5.62	79.11	5.20	79.66	5.03	39.45	4.83	36.77	4.37
2.00	80.99	6.57	83.66	6.49	91.34	6.01	91.98	5.81	45.55	5.58	42.45	5.05
2.50	90.55	7.35	93.53	7.25	102.13	6.72	102.83	6.49	50.93	6.24	47.47	5.64
3.00	99.19	8.05	102.46	7.94	111.87	7.36	112.65	7.11	55.79	6.84	52.00	6.18
3.50	107.14	8.70	110.67	8.58	120.84	7.95	121.68	7.68	60.26	7.38	56.16	6.68
4.00	114.53	9.30	118.31	9.17	129.18	8.50	130.08	8.21	64.42	7.89	60.04	7.14
4.50	121.48	9.86	125.49	9.73	137.02	9.01	137.97	8.71	68.33	8.37	63.68	7.57
5.00	116.06	10.00	124.11	10.00	144.43	9.50	145.43	9.18	72.03	8.83	67.13	7.98
5.50	107.83	10.00	115.33	10.00	151.48	9.97	152.53	9.63	75.54	9.26	70.40	8.37

6.00	100.85	10.00	107.87	10.00	142.98	10.00	157.02	10.00	78.90	9.67	73.53	8.74
6.50	94.83	10.00	101.44	10.00	134.51	10.00	147.73	10.00	80.80	10.00	76.54	9.10
7.00	89.59	10.00	95.84	10.00	127.12	10.00	139.63	10.00	76.32	10.00	79.42	9.44
7.50	84.97	10.00	90.91	10.00	120.61	10.00	132.50	10.00	72.37	10.00	82.21	9.78
8.00	80.88	10.00	86.54	10.00	114.83	10.00	126.16	10.00	68.87	10.00	81.72	10.00
8.50	77.21	10.00	82.62	10.00	109.66	10.00	120.48	10.00	65.74	10.00	74.62	10.00
9.00	73.91	10.00	79.09	10.00	105.00	10.00	115.36	10.00	62.92	10.00	68.49	10.00
9.50	70.92	10.00	75.90	10.00	100.77	10.00	110.73	10.00	60.37	10.00	63.15	10.00
10.00	68.20	10.00	72.99	10.00	96.93	10.00	106.50	10.00	58.04	10.00	58.47	10.00

Figure 6.2.2.1 - Storm Drainage, Flow Velocities & Capacities for Typical Conventional Street Sections

6.2.3 - High Velocity Flow

Streets may be used for storm water drainage only if the calculated storm water flow does not exceed ten (10) feet per second.

6.2.4 - Longitudinal Slope

Longitudinal slopes of a roadway are determined by its street classification as described in Sections 6.2.1. Table 506-3 and Table 506-4 contained in the UDC under Section 35-506 shall be used as the latest design standards.

6.2.4.1 - Minimum

All proposed streets, both inside the City Limits and in the Extraterritorial Jurisdiction, shall have a minimum Longitudinal Slope of 0.5%. An optional 0.4% longitudinal slope can used with a concrete curb and gutter.

6.2.4.2 - Maximum

The maximum Longitudinal Slope for Primary and Secondary Arterial Streets will be 5% both ICL and within the ETJ. The maximum slope for Collector Streets will be 7% both ICL and within the ETJ. The maximum slope for Local 'A', Local 'B', and alleys will be 12% ICL. The maximum slope for Local 'A', Local 'B', and alleys will be 10% in the ETJ. The maximum slope for a Traditional Street Parkway or Boulevard will be 5%. The maximum slope for a Traditional Street Main Street or Avenue will be 7%. The

maximum slope for a Traditional Street Local, Lane, Alley, and County Section will be 10%. Grades over ten (10) percent in the extra-territorial jurisdiction shall be approved by the county fire marshal.

6.2.5 - Cross Slope

The minimum and maximum street cross slopes are as described below. If not found below, then the cross slope will follow the latest version of AASHTO's guidelines for "A Policy on Geometric Design of Highways and Streets".

6.2.5.1 - Minimum

All proposed streets must have a minimum cross slope of 2%. A slope less than 2% may be used to re-direct storm water runoff at street intersections, Cul-de-sacs, or into receiving drainage structures.

6.2.5.2 - Maximum

All proposed streets should have a maximum cross slope of 4%. Cross slope at intersections may exceed 4% depending on the slope of the intersecting streets. Streets with super elevation should follow the latest version of AASHTO's guidelines for "A Policy on Geometric Design of Highways and Streets," and meet all the requirements identified in Section 6.2.1 (depth of flow at curb, one passable lane in each direction, flow contained within right-of-way - all that apply).

6.2.6 - Inverted Crown

Streets with inverted crowns will be acceptable if approved by the Director of TCI.

6.2.6.1 - Maximum Flow Depth

Streets with a proposed inverted crown section will meet the same maximum depth based on their street classification as described above.

6.2.8 - Flow In Sag - Vertical Curves

When street flow approaches a low point in the roadway the maximum depth design criteria(s) above should be checked to provide that the design runoff remains within the allowable limits (depth of flow at curb, one passable lane in each direction, flow contained within right-of-way, and all others that apply). If the maximum design criteria exceed any of the design parameters, additional inlets or curb openings are required to reduce the flow upstream of the low point.

6.2.9 - Unflooded Public Road Access

During a design storm event unflooded access (within the "Proceed with Caution" range per Figure 4.3.1C) shall be available from each proposed new development to an adjacent public street during a regulatory flood event. Additionally, unflooded access shall be accessible to an arterial street that is not adjacent to the development or to a distance of one-quarter (1/4) mile, whichever is less, during a future conditions twenty percent (20%) annual chance (five-year ultimate) flood event. The director of TCI may waive the design criteria above for developments under three (3) acres in size.

6.3 - References

AASHTO. *A Policy on Geometric Design of Highways and Streets - 1994.* American Association of State Highway and Transportation Officials, Washington, DC, 1995.

TxDOT. *Roadway Design Manual.* Texas Department of Transportation, Revised October 2002.

CHAPTER 7 - STORM DRAIN SYSTEMS

7.1 - Introduction

The street system, roadside ditch, swale or channel may direct flow into an inlet, grate, or other collection structure into the storm drain system. This storm drain system will be comprised of inlets, pipes, junction boxes, bends, outlets, and other appurtenances. These systems may include water quality devices to meet state and federal water quality standards. This chapter describes the general guidelines needed to provide an adequate storm drain system and minimize impacts to both upstream and downstream properties.

The following shall be considered during the design of the storm drain systems.

For all ordinary conditions, storm drains shall be designed on the assumption that they will flow full under the design discharge; however, when there are constrictions, turns, submerged, or inadequate outfall, etc., the hydraulic and energy grade lines shall be computed and plotted in profile. The Energy Grade Line (EGL) shall be below the top of curb and the Hydraulic Grade Line (HGL) shall be below the gutter elevation of the drainage structure. In all cases adequate outfalls shall be provided, including review of point source discharges.

The EGL and HGL will be required on all storm drain systems.

7.2 - Hydraulics Of Storm Drainage Systems

7.2.1 - Flow Type Assumptions

The design procedures assume that the flow within each segment of the underground drainage system is steady and uniform. Also the average velocity within each segment is considered to be constant.

7.2.2 - Partial Flow vs. Pressure Flow

There are two types of considerations for sizing storm drain lines under steady uniform flow assumption. The first is referred to as partial or open channel flow design. The flow depth within the conduit is less than the height of the conduit; so the HGL will be within the conduit. The second is referred to as pressure flow design or full flow. The conduit is fully flowing, and the HGL may be at the soffit or above the soffit of the conduit. See Figure 7.2.4.

For partial flow the design engineer should check for possible hydraulic jumps within the system if the flow is supercritical. If a hydraulic jump occurs within the system, the upper conduits could change to pressure flow or the hydraulic jump could move downstream within the conduit to another design point.

The design may have both partial and pressure flow segments within the same drainage system.

The drainage system should be designed for full flow as this will increase the efficiency of the storm drain system.

7.2.3 - Hydraulic Capacity

The hydraulic capacity is controlled by the conduits size, shape, and frictional resistance. Use Manning's Formula for the design of all conduits.

(Equation 7.2.3a)

$$Q = AV$$

Q = flow (cfs.)
A = cross section area (sq. ft.)
V = velocity of flow (ft./sec.)

(Equation 7.2.3b)

$$\mathbf{Q = \frac{1.49}{n} A R^{0.67} S_f^{0.5}}$$

Q = flow (cfs.)
A = cross section area (sq. ft.)
n = roughness coefficient of conduit
R = hydraulic radius = A/ **WP** (ft.)
WP = wetted perimeter (ft.)
S $_f$ = frictional slope of conduit (ft./ft.)

The "n" value to be used in Manning's Formula shall conform to Table 7.2.3 for design purposes. Any other "n" value shall be based on generally accepted engineering principles.

Table 7.2.3 - Manning's Roughness Coefficient

Type of Culvert	Roughness or Corrugation	Manning's n
Concrete Pipe	Smooth	0.013
Concrete Box	Smooth	0.013
Corrugated Metal Pipe, Pipe-Arch - Unpaved	2-2/3 by 1/2 inch Annular	0.024
Corrugated Metal Pipe, Pipe-Arch - Unpaved	3 by 1 inch Annular	0.027

7.2.4 - Hydraulic Grade Line and Energy Grade Line

The HGL is the water surface of an open channel or the water surface of a conduit with partial flow. For a conduit with pressure flow, the HGL would be the level of water surface that would rise within a vertical tube at any point along the conduit.

The EGL is an imaginary line that is the measure of total energy along the open channel or conduit carrying water. This total energy includes elevation head, velocity head, and pressure head. The EGL is a velocity head ($V^2/2g$) above the HGL. The EGL is always increasing in the upstream conduit. The EGL should not be above the finished grade, or top of curb, at any point along the conduit.

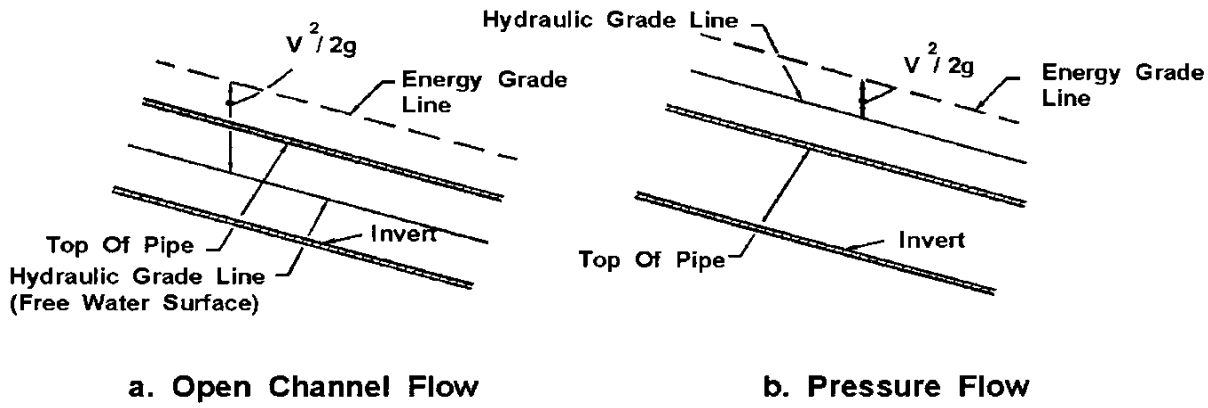

Figure 7.2.4 *- Hydraulic and Energy Grade Line in a conduit (Source FHWA HEC No. 22)*

7.2.5 - Storm Dain Inlets and Outfalls

7.2.5.1 - Inlets

The drainage system will include inlets on streets, parking areas, and other areas to direct flow into the underground system. For inlets on streets, the HGL at the inlet should be below the gutter and the EGL not be above the top of curb or ponding depth. For area inlets the EGL should not be higher than the ponding depth.

An inlet could also be a pickup structure that channelizes flow from an upstream channel into the underground system. Careful analysis of the junction between the downstream underground system and the upstream channel should be performed to check both the HGL and EGL.

7.2.5.2 - Outfalls

The outfall for the storm drain system should discharge into a natural low, existing storm drainage system, or a channel. The start of the EGL for the storm drain system begins at the outfall. The design engineer should determine the tail water for the downstream drain to find the impact on the proposed outfall. There are two conditions for determining the starting point for the HGL at the outfall. The tail water may be above the critical depth of the outfall conduit or between the critical depth and invert of the outfall conduit. The starting point for the HGL should be either the tail water elevation or the average of critical depth plus the height of the storm drain conduit, whichever is greater. The design engineer will consider an exit loss at the outlet.

If the outfall of the storm drain system is into a river, stream, or creek, the design engineer should consider the coincidental probability of the peaks of both systems occurring at the same time. The tail water for the receiving stream should be checked with the peak of the storm drain system.

7.2.6 - Energy Losses

The energy losses for the storm drain system include frictional, exit, entrance, bend, and manhole and junction losses. These losses add to the hydraulic gradient along the storm drain system.

7.2.6.1 - Pipe Friction Losses

The frictional loss from the conduit is one of the losses. The head loss due to friction is determined by the following formulas:

(Equation 7.2.6.1a, Friction Loss Formula)

$$H_f = S_f L$$

H_f = Friction loss (ft.)
S_f = Friction slope (ft./ft.)
L = Length of pipe (ft.)

Should the conduit have partial flow, then the frictional slope will match the pipe slope. For pressure flow or full flow of the conduit, the formula below can be used to determine the frictional slope of the conduit:

(Equation 7.2.6.1b, Pressure Flow Formula)

$$S_f = \left[Q\left(\frac{n}{1.49}\right) / \left(AR^{2/3}\right)\right]^2$$

S_f = Friction slope (ft./ft.)
Q = flow (cfs.)
n = roughness coefficient of conduit
A = cross section area (sq. ft.)
R = hydraulic radius = A/WP (ft.)
WP = wetted perimeter (ft.)

7.2.6.2 - Exit Losses

The exit loss from the storm drain outlet should be determined by the following formula:

(Equation 7.2.6.2, Exit Loss Formula)

$$H_o = 1.0\left[\left(\frac{V_o^2}{2g}\right) - \left(\frac{V_d^2}{2g}\right)\right]$$

H_o = Exit loss (ft.)
V_o = Velocity of outfall conduit (fps)
g = Acceleration due to gravity (ft./s ^{2} (32.2 ft./s ^{2}))
V_d = Velocity of downstream channel (fps)

7.2.6.3 - Bend Losses

This loss is for a bend located in the conduit run and not at a junction or manhole structure. Use the following formula to determine the bend loss:

(Equation 7.2.6.3, Bend Loss Formula)

$$H_b = 0.0033(\Delta)\left(\frac{V^2}{2g}\right)$$

H_b = Bend loss (ft.)
Δ = Angle of curvature in degrees
V = Velocity of the conduit (fps)
g = Acceleration due to gravity (ft./s ^{2} (32.2 ft./s ^{2}))

7.2.6.4 - Transition Losses

These losses are used where box culverts have a transition in width, height, or both width and height. The energy loss for expansions or contraction in open channel or partial flow must use the following formulas:

(Equation 7.2.6.4a)

$$\mathbf{H_c = K_c\left[\left(V_2^2/2g\right) - \left(V_1^2/2g\right)\right]}$$

$$\mathbf{H_e = K_e\left[\left(V_1^2/2g\right) - \left(V_2^2/2g\right)\right]}$$

H $_c$ = Contraction loss (ft.)
H $_e$ = Expansion loss (ft.)
K $_c$ = Contraction coefficient (0.5 K $_e$)
K $_e$ = Expansion coefficient
V $_1$ = Velocity upstream of transition (fps)
V $_2$ = Velocity downstream of transition (fps)
g = Acceleration due to gravity (ft./s ^{2} (32.2 ft./s ^{2}))

Energy loss for expansions or contraction in pressure flow conditions will use the following formulas:

(Equation 7.2.6.4b)

$$\mathbf{H_c = K_c\left(V_2^2/2g\right)}$$

$$\mathbf{H_e = K_e\left(V_1^2/2g\right)}$$

H $_c$ = Contraction loss (ft.)
H $_e$ = Expansion loss (ft.)
K $_c$ = Contraction coefficient (Tables 7.2.E)
K $_e$ = Expansion coefficient (Tables 7.2.C and 7.2.D)
V $_1$ = Velocity upstream of transition (fps)
V $_2$ = Velocity downstream of transition (fps)
g = Acceleration due to gravity (ft./s ^{2} (32.2 ft./s ^{2}))

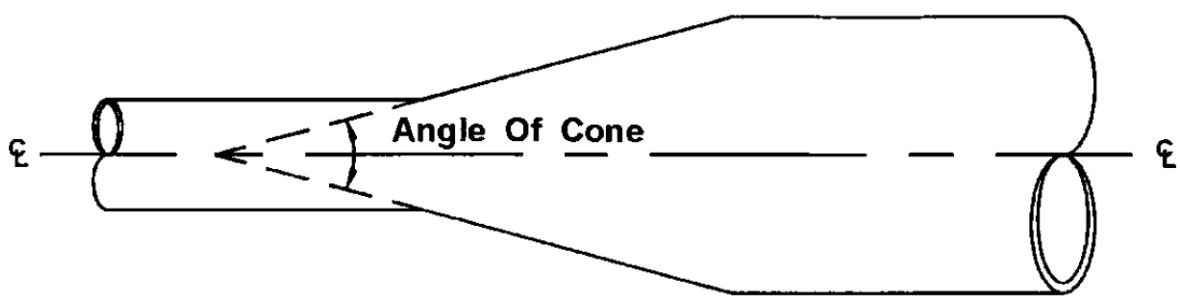

Figure 7.2.6.4 *- Angle of Cone for change in pipe diameter (Source FHWA HEC 22)*

Table 7.2.6.4A - *(Source FHWA HEC 22)*

Typical Values for K $_e$ for Gradual Enlargement of Pipes in Non-Pressure Flow							
D $_2$/D $_1$	Angle of Cone						
	10°	20°	45°	60°	90°	120°	180°

1.5	0.17	0.40	1.06	1.21	1.14	1.07	1.00
3	0.17	0.40	0.86	1.02	1.06	1.04	1.00

Table 7.2.6.4B - *(Source ASCE Manuals and Reports of Engineering Practice No. 77)*

Typical Values of K_c for Sudden Pipe Contractions	
D_2/D_1	K_c
0.2	0.5
0.4	0.4
0.6	0.3
0.8	0.1
1.0	0.0
D_2/D_1 = Ratio of diameter of smaller pipe to larger pipe.	

Table 7.2.6.4C - *(Source ASCE Manuals and Reports of Engineering Practice No. 77)*

Values of K_e for Determining Loss of Head due to Sudden Enlargement in Pipes.													
D_2/D_1	Velocity, V_1, in feet Per Second												
	2.0	3.0	4.0	5.0	6.0	7.0	8.0	10.0	12.0	15.0	20.0	30.0	40.0
1.2	0.11	0.10	0.10	0.10	0.10	0.10	0.10	0.09	0.09	0.09	0.09	0.09	0.08
1.4	0.26	0.26	0.25	0.24	0.24	0.24	0.24	0.23	0.23	0.22	0.22	0.21	0.20
1.6	0.40	0.39	0.38	0.37	0.37	0.36	0.36	0.35	0.35	0.34	0.33	0.32	0.32

1.8	0.51	0.49	0.48	0.47	0.47	0.46	0.46	0.45	0.44	0.43	0.42	0.41	0.40
2.0	0.60	0.58	0.56	0.55	0.55	0.54	0.53	0.52	0.52	0.51	0.50	0.48	0.47
2.5	0.74	0.72	0.70	0.69	0.68	0.67	0.66	0.65	0.64	0.63	0.62	0.60	0.58
3.0	0.83	0.80	0.78	0.77	0.76	0.75	0.74	0.73	0.72	0.70	0.69	0.67	0.65
4.0	0.92	0.89	0.87	0.85	0.84	0.83	0.82	0.80	0.79	0.78	0.76	0.74	0.72
5.0	0.96	0.93	0.91	0.89	0.88	0.87	0.86	0.84	0.83	0.82	0.80	0.77	0.75
10.0	1.00	0.99	0.96	0.95	0.93	0.92	0.91	0.89	0.88	0.86	0.84	0.82	0.80
∞	1.00	1.00	0.98	0.96	0.95	0.94	0.93	0.91	0.90	0.88	0.86	0.83	0.81

D_2/D_1 = ratio of diameter of larger pipe to smaller pipe
V_1 = Velocity in smaller pipe (upstream of transition)

Table 7.2.6.4D - *(Source ASCE Manuals and Reports of Engineering Practice No. 77)*

Values of K_e for Determining Loss of Head due to Gradual Enlargement in Pipes.											
D_2/D_1	Angle of Cone										
	2°	6°	10°	15°	20°	25°	30°	35°	40°	50°	60°
1.1	0.01	0.01	0.03	0.05	0.10	0.13	0.16	0.18	0.19	0.21	0.23
1.2	0.02	0.02	0.04	0.09	0.16	0.21	0.25	0.29	0.31	0.35	0.37
1.4	0.02	0.03	0.06	0.12	0.23	0.30	0.36	0.41	0.44	0.50	0.53
1.6	0.03	0.04	0.07	0.14	0.26	0.35	0.42	0.47	0.51	0.57	0.61
1.8	0.03	0.04	0.07	0.15	0.28	0.37	0.44	0.50	0.54	0.61	0.65
2.0	0.03	0.04	0.07	0.16	0.29	0.38	0.46	0.52	0.56	0.63	0.68

2.5	0.03	0.04	0.08	0.16	0.30	0.39	0.48	0.54	0.58	0.65	0.70
3.0	0.03	0.04	0.08	0.16	0.31	0.40	0.48	0.55	0.59	0.66	0.71
∞	0.03	0.05	0.08	0.16	0.31	0.40	0.49	0.46	0.60	0.67	0.72

D_2/D_1 = ratio of diameter of larger pipe to smaller pipe
Angle of cone is the angle in degrees between the sides of the tapering section

Table 7.2.6.4E - *(Source ASCE Manuals and Reports of Engineering Practice No. 77)*

Values of K_e for Determining Loss of Head due to Sudden Contraction.													
D_2/D_1	Velocity, V_1, in feet Per Second												
	2.0	3.0	4.0	5.0	6.0	7.0	8.0	10.0	12.0	15.0	20.0	30.0	40.0
1.1	0.03	0.04	0.04	0.04	0.04	0.04	0.04	0.04	0.04	0.04	0.05	0.05	0.60
1.2	0.07	0.07	0.07	0.07	0.07	0.07	0.07	0.08	0.08	0.08	0.09	0.10	0.11
1.4	0.17	0.17	0.17	0.17	0.17	0.17	0.17	0.18	0.18	0.18	0.18	0.19	0.20
1.6	0.26	0.26	0.26	0.26	0.26	0.26	0.26	0.26	0.26	0.26	0.25	0.25	0.24
1.8	0.34	0.34	0.34	0.34	0.34	0.34	0.33	0.33	0.32	0.32	0.32	0.29	0.27
2.0	0.38	0.38	0.37	0.37	0.37	0.37	0.36	0.36	0.35	0.34	0.33	0.31	0.29
2.2	0.40	0.40	0.40	0.39	0.39	0.39	0.39	0.38	0.37	0.37	0.35	0.33	0.30
2.5	0.42	0.42	0.42	0.41	0.41	0.41	0.40	0.40	0.39	0.38	0.37	0.34	0.31
3.0	0.44	0.44	0.44	0.43	0.43	0.43	0.42	0.42	0.41	0.40	0.39	0.36	0.33
4.0	0.47	0.46	0.46	0.46	0.45	0.45	0.45	0.44	0.43	0.42	0.41	0.37	0.34
5.0	0.48	0.48	0.47	0.47	0.47	0.46	0.46	0.45	0.45	0.44	0.42	0.38	0.35

10.0	0.49	0.48	0.48	0.48	0.48	0.47	0.47	0.46	0.46	0.45	0.43	0.40	0.36
∞	0.49	0.49	0.48	0.48	0.48	0.47	0.47	0.47	0.46	0.45	0.44	0.41	0.38

D_2/D_1 = ratio of diameter of larger pipe to smaller pipe
V_1 = Velocity in smaller pipe (downstream of transition)

7.2.6.5 - Junction Losses

For junction losses the design engineer can use the losses found in the University of Missouri Engineering Bulletin No. 41 "Pressure Changes at Storm Drain Junctions." The bulletin was a result of flume model testing.

The conduit junction losses within this section is for the connection of a lateral pipe to a larger storm drain trunk line without an access manhole. The following formula is a form of the momentum equation.

(Equation 7.2.6.5)

$$\mathbf{H_j = \left\{\left[(Q_o V_o) - (Q_i V_i) - \left(Q_l V_l \cos\theta_j\right)\right] / \left[0.5 g (A_o + A_i)\right]\right\} + h_i - h_o}$$

H_j = Junction loss (ft.)
Q_o, **Q_i**, **Q_l** = Outlet, inlet, and lateral flows (cfs)
V_o, **V_i**, **V_l** = Outlet, inlet, and lateral velocity
h_o, **h_i** = Outlet and inlet velocity head (ft.)
A_o, **A_i** = Outlet and inlet cross sectional area (ft.^{2})
θ_j = Angle between the inflow trunk line and lateral pipe

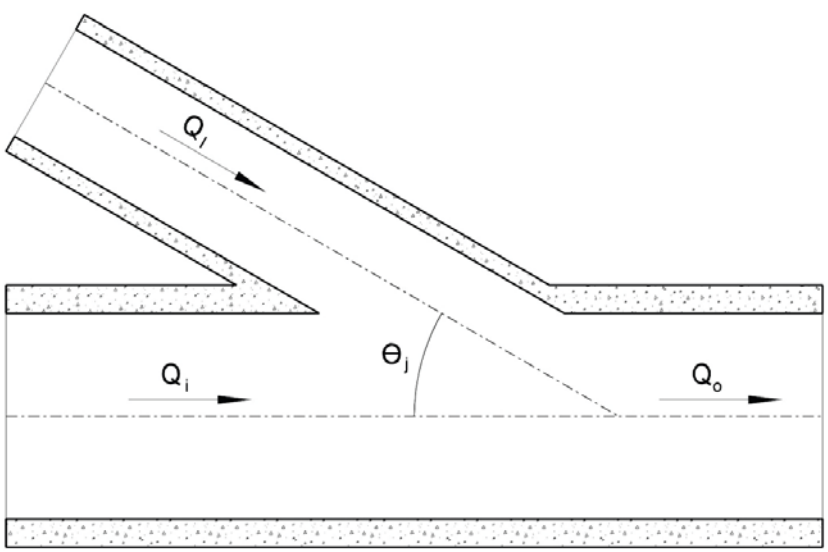

Figure 7.2.6.5 - Interior angle for pipe junction without manhole (Source FHWA HEC 22)

7.2.6.6 - Inlet and Manhole Losses

The conduit junction losses within this section are for the connection of a lateral pipe(s) to a larger storm drain trunk line with an access manhole or junction box.

There are a number of ways to determine the losses within a junction. It is up to the design engineer to determine the appropriate loss method.

7.2.6.6.1 Missouri Charts

The instructions and charts from the University of Missouri Engineering Bulletin No. 41 "Pressure Changes at Storm Drain Junctions" is provided in the Appendix B of this manual as a reference for the design engineer should there be special configuration of manholes and junction boxes within the storm drain system. The University of Missouri Engineering Bulletin No. 41 "Pressure Changes at Storm Drain Junctions" was the results of flume model testing.

7.2.6.6.2 FHWA Inlet and Access Hole Energy Loss

FHWA has been developing and refining the methods to determine the energy losses within access manholes (junction box) and inlets. The effort has been supported by research and laboratory analysis to improve the methods. These methods calculate the energy level through the manhole.

The FHWA method follows the following three steps. For more information on this method see reference FHWA HEC-22 Urban Drainage Design Manual.

STEP 1: Determine an initial access hole energy level (E_{ai}) based on inlet control (weir and orifice) or outlet control (partial and full flow) equations.

STEP 2: Adjust the initial access hole energy level based on benching, inflow angle(s), and plunging flows to compute the final calculated energy level (E_a).

STEP 3: Calculate the exit loss from each inflow pipe and estimate the energy grade line (EGL_o), which will then be used to continue calculations upstream.

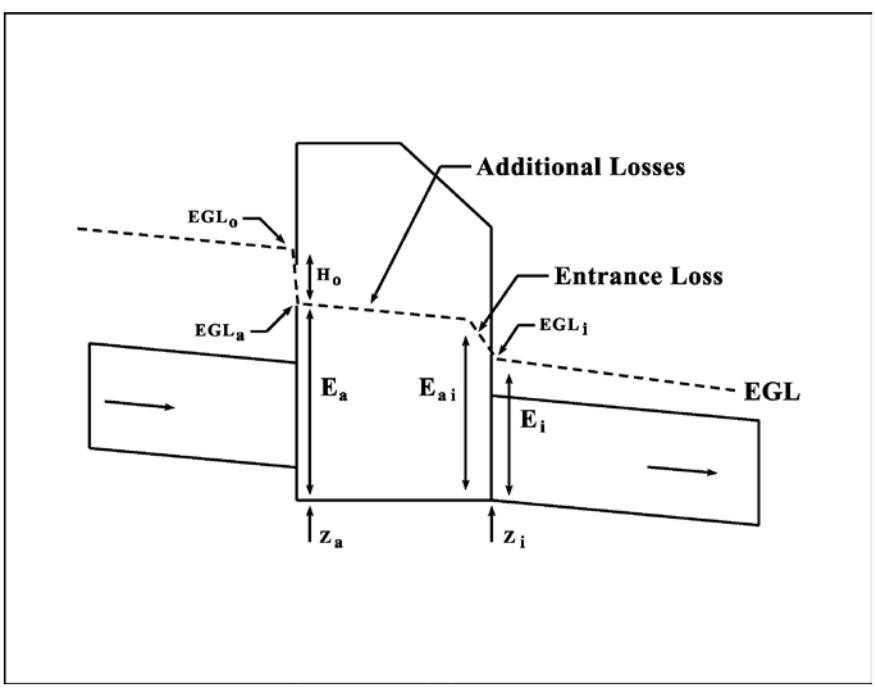

Figure 7.2.6.6.2 Sketch of FHWA access hole method *(Source FHWA HEC-22, 3 rd Edition)*

7.2.6.6.3 Energy Loss Method (FHWA HEC-22, 2 nd Edition)

A number of modeling programs use this method to calculate the energy loss for a junction.

When the inflow conduit invert is above the water surface elevation in the manhole, then the energy loss method does not apply to this upstream conduit.

(Equation: 7.2.6.6.3a)

$$H_{ah} = K\left(\frac{V_o^2}{2g}\right)$$

$$K = K_o C_D C_d C_Q C_p C_B$$

H $_{ah}$ = Energy loss head
K = adjusted loss coefficient
K $_o$ = initial head loss coefficient based on relative access hole size
C $_D$ = correction factor for pipe diameter (pressure Flow only)
C $_d$ = correction factor for Flow depth
C $_Q$ = correction factor for relative Flow
C $_p$ = correction factor for plunging Flow
C $_B$ = correction factor for benching
V $_o$ = velocity of outlet pipe
K $_o$ **:** The initial head loss coefficient is based on the relative access hole size and the angle of deflection between the inflow and outflow conduits.

(Equation: 7.2.6.6.3b)

$$K_o = 0.1\left(\frac{b}{D_o}\right)(1 - \sin\theta) + 1.4\left(\frac{b}{D_o}\right)^{0.15} \sin\theta$$

K $_o$ = initial head loss coefficient based on relative access hole size
θ = angle between the inflow and outflow pipes (figure 7.2.6.6.3A)
b = access hole or junction diameter
D $_o$ = outlet pipe diameter

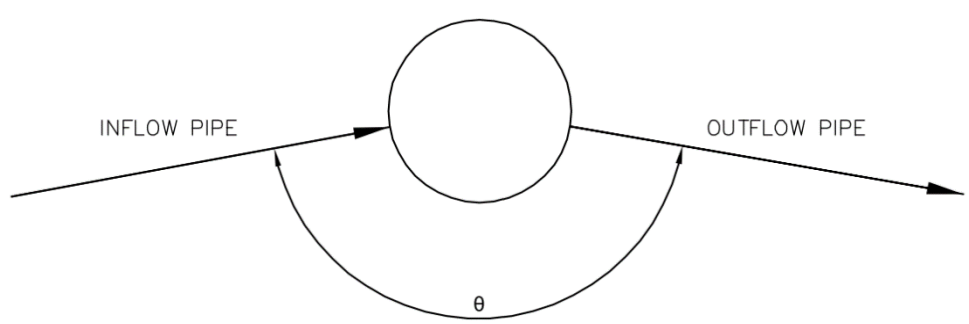

Figure 7.2.6.6.3.A - Deflection angle

C $_D$ **:** When the depth of flow within the manhole relative to the diameter of the outlet conduit ratio, d $_{aho}$ /D $_o$, is greater than 3.2, the correction factor for the **conduit diameter** is as follows.

(Equation: 7.2.6.6.3c)

$$C_D = \left(\frac{D_o}{D_i}\right)^3$$

C_D = correction factor for pipe diameter (pressure Flow only)
D_o = outgoing pipe diameter
D_i = inflowing pipe diameter

C_d : The correction factor for **flow depth** is used when the depth of flow within the manhole relative to the diameter of the outlet conduit ratio, d_{aho}/D_o, is less than 3.2. If the ratio is greater than 3.2, then the value of C_d is set to 1. The correction factor for **flow depth** is as follows.

(Equation: 7.2.6.6.3d)

$$C_d = 0.5\left(\frac{d_{aho}}{D_o}\right)^{0.6}$$

C_d = correction factor for Flow depth
d_{aho} = water depth in access hole above the outlet pipe invert
D_o = outlet pipe diameter

C_Q : The correction factor for **relative flow** is a function of the angle of the incoming flow and the percentage of flow coming in through the conduit of interest. The correction factor will be different for each upstream conduit. The correction factor for **relative flow** is applicable where the conduits are approximately the same elevation, otherwise the value of C_Q is equal to 1.

(Equation: 7.2.6.6.3e)

$$C_Q = (1 - 2\sin\theta)\left(1 - \frac{Q_i}{Q_o}\right)^{0.75} + 1$$

C_Q = correction factor for relative Flow
θ = the angle between the inflow and outflow pipes (figure 7.2.6.6.3.B)
Q_i = Flow in the inflow pipe
Q_o = Flow in the outflow pipe

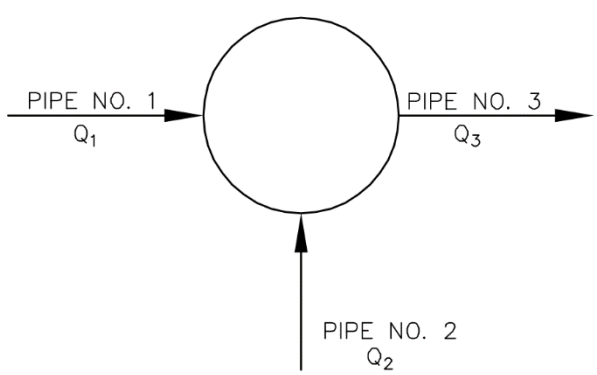

Figure 7.2.6.6.3.B - Relative flow effect

C_p : The correction factor for **plunging flow** is where the inflow one of the conduits plunges into the water surface within the manhole. This correction factor is applied to the inflow conduit and the outflow are at the bottom of the manhole and when $h > d_{aho}$. Flows from a grate inlet or curb opening are

considered **plunging flow** . If there are no plunging flow within the manhole, the correction factor is set to 1.

(Equation: 7.2.6.6.3f)

$$C_p = 1 + 0.2\left(\frac{h}{D_o}\right)\left(\frac{h - d_{aho}}{D_o}\right)$$

C_p = correction for plunging Flow
h = vertical distance of plunging Flow from the Flow line of the higher elevation inlet pipe to the center of the outflow pipe
D_o = outlet pipe diameter
d_{aho} = water depth in access hole relative to the outlet pipe invert

C_B : The correction factor for **benching** in the manhole is obtained from Table 7.2.6.6.3. The benching directs flow through the manhole. See Figure 7.2.6.6.3C

Table 7.2.6.6.3 - Correction for Benching

Bench Type	Correction Factors, C_B	
	Submerged*	Unsubmerged**
Flat or Depressed Floor	1.00	1.00
Half Bench	0.95	0.15
Full Bench	0.75	0.07

**pressure Flow, $d_{aho}/D_o \geq 3.2$*
***free surface Flow, $d_{aho}/D_o \leq 1.0$*

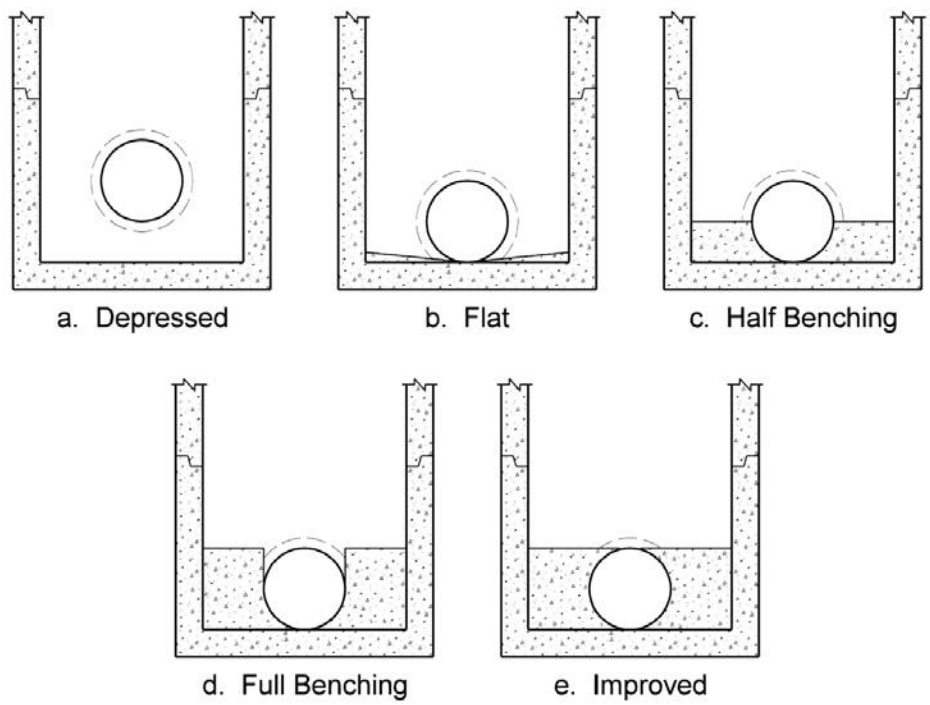

Figure 7.2.6.6.3.C - Manhole benching methods *(Source FHWA HEC-22, 3 rd Edition)*

7.3 - Design Guidelines

7.3.1 - Design Frequency

The system must be designed for the ultimate twenty-five (25)-year storm if the cumulative drainage area within the system is less than one hundred (100) acres. If the cumulative drainage area within the system is more than one hundred (100) acres, the system should be designed for the ultimate one hundred (100)-year storm.

7.3.2 - Time of Concentration and Discharge

The rational formula should be used to determine the discharges through the storm drain system. The time of concentration is the time required for water to travel from the most hydraulically distant point in the watershed to the point under consideration. The time of concentration is comprised of overland flow, sheet flow, and gutter flow to the first inlet. Then from the first inlet there is additional time in the underground drainage system to the design points which should be considered. With the total time of concentration to the point of interest in the storm drain system the designer can select the intensity value for use in the rational formula.

7.3.3 - Velocity and Grade Considerations

The minimum cleaning velocity for a storm drain line is three (3) fps for a 5 year event is recommended. Use the following formula to determine the minimum slope required for a velocity of three (3) fps.

(Equation: 7.3.3)

$$\mathbf{S = K_u\left[(nV)/D^{0.67}\right]^2}$$

S = pipe slope (ft./ft.)
K $_u$ = 2.87
n = Manning's N
V = Cleaning velocity (ft./sec.)
D = diameter of conduit (ft.)

The maximum velocity for a storm drain line in a twenty-five (25)-year event should follow Table 7.3 below. Velocities above the maximum shall be approved by the Director of TCI.

Table 7.3 - Maximum Velocity

Type	Maximum Permissible Velocity
Laterals	No limit
Main trunk lines	15 fps

The minimum slope for the storm drain line is 0.3% or as approved by the Director of TCI.

7.3.4 - Pipe/Box Size and Placement

No storm drains shall be less than twenty-four (24) inches in diameter. For laterals and at driveway and roadway crossings, the minimum pipe/culvert size shall be twenty-four (24) inches in diameter unless the option for multiple smaller sized culverts is approved by the Director of TCI. A minimum (15) inches in diameter culvert pipe may be used for driveways accessing a county road section when required within the city limits or by the County Engineer in the County or ETJ.

If a storm drain accepts storm water from offsite area, the storm drain should not be placed below/underneath buildings or structures unless approved by the Director of TCI. If a proposed building or structure is over an existing storm drain, the storm drain should be relocated around the exterior of the building or structure.

Minimum cover over pipes and boxes should be maintained to make sure the structural stability of the conduit under live and impact loads. Pipes shall have a minimum cover per the manufactures design requirements.

7.3.5 - Multiple Conduits Spacing and Placement

Should multiple parallel precast box culverts be used for a storm drain line, the spacing between adjacent boxes shall be six (6) inches. An increase in this dimension will require additional consideration of the fill material between the boxes.

Should multiple conduits, other than multiple parallel precast box culverts mentioned above, be used, the minimum spacing between conduits should be one (1) foot to allow for the compaction of backfill around the conduits.

Flow equalizers may be needed between multiple conduits to equalize the HGL where laterals or other conduits tie into the drainage system. The equalizer opening should have the same area as the incoming conduit.

7.3.6 - Access Spacing

The maximum distance between access points in a storm drain line shall be five hundred (500) feet.

7.3.7 - Manholes

Manholes to be used on box culvert storm drain lines shall have a manhole ring with a locking or bolted cover and with an inside diameter of thirty (30) inches for maintenance access.

7.3.8 - Junction Boxes

Junction boxes shall be constructed at locations of laterals, changes in grade or alignment of pipes. The riser should have a manhole ring with a locking or bolted cover and with an inside diameter of thirty (30) inches for maintenance access. At the spring line of the pipe, the inside wall of the junction box must be a minimum of the outside diameter of the pipe, plus six (6) inches on each side of the pipe. If the pipe is at a skew to the junction box wall, additional distance is required. When an upstream conduit is smaller than the downstream conduit, it is preferable to match conduit soffits, unless the upstream conduit needs to miss a conflict such as a utility or minimum conduit cover.

7.3.9 - Materials and Specifications

7.3.9.1 - Pipe Material

The pipe material must have a minimum service life of fifty (50) years.

Reinforced concrete pipe is preferred. The use of HDPE or PVC, or corrugated metal pipe will not be allowed crossing under public streets or within public street ROW unless approved by the Director of TCI. If use is allowed by the Director of TCI, corrugated metal pipe must be checked for corrosion resistance. Asphalt lining or bituminous interior coated corrugated metal pipe will not be allowed.

7.3.9.2 - Minimum Structural Loads

The minimum live load should be HS 20 for streets and E 80 for railways. Heavier live load may be needed in special cases, and the design engineer should determine the required live load.

7.3.9.3 - Mud Slab

A mud slab is a base slab of low strength concrete used to level up or stabilize the bottom of an excavation for the placement of multiple inlets, multiple boxes, or other structures. The mud slab is from two (2) to six (6) inches thick, but may be thicker if needed.

7.3.10 - Outfalls

The outfall of a storm drain system should be to an existing low or proposed channel. The discharge velocity from the outfall should not cause erosion to the existing low or proposed channel. Velocity controls should be used when erosion is possible of the existing low or proposed channel. The outfall of the storm drain should be positioned in the existing low or proposed channel in the downstream direction to reduce the turbulence and erosion. The design engineer should meet with TCI Storm Water Division to discuss a solution, if a defined low does not exist for the discharge of the outfall. Should the discharge from an outfall cross a sidewalk area, discharge will not be allowed over the sidewalk. A channel section will be provided under the sidewalk.

7.3.10.1 - Velocity Controls

Energy dissipation at the outlet may be required to prevent erosion of the channel bottom and banks. The use of baffle blocks, USBR Type VI impact basin, Contra Costa Basin, rock riprap basin, and rock riprap

aprons may be used to reduce the velocity of the discharge from the storm drain conduit. See Chapter 10.4.3 for use of different energy dissipators.

The velocity at the end of the outlet structure should be a maximum of six (6) ft/sec. Sandy soils may require a discharge velocity less than six (6) ft/sec. The design engineer should be aware of the types of soils at the outfall location and design accordingly.

7.3.11 - French Drains

French drains are used to control ground water or surface water. The French drain consists of a perforated pipe with a fabric sock around the exterior of the pipe to keep soil particles from entering the pipe. The pipe is installed in a trench filled with gravel.

A project may encounter a perched water table that will impact the street design section. A French drain may be needed to intercept the ground water that will impact the street section. The French drain should be placed in the parkway between the curb and property line, and should outfall into a drainage inlet, pipe, or channel. The outfall should not drain onto the street, as this could cause street failure or cause an unsafe condition.

7.4 - Maintenance Considerations

A few items to consider during the design of a storm drain system would be the minimum cleaning velocity to keep sediment in suspension during a storm, access points along the trunk line for ease of maintenance personnel to clean and inspect the system, and access to outfall or intake structures for cleaning and inspection. See Chapter 4.12 for additional guidance on maintenance standards.

7.5 - References

- FHWA. *Hydraulic Design of Energy Dissipators for Culverts and Channels.* Hydraulic Engineering Circular No. 14. 3rd edition. FHWA-NHI-06-086. Federal Highway Administration, Department of Transportation, Washington, DC, July 2006.

- FHWA. *Urban Drainage Design Manual.* Hydraulic Engineering Circular No. 22, 3rd edition, FHWA-NHI-10-009. Federal Highway Administration, U.S. Department of Transportation, Washington, DC, Sept. 2009.

- ASCE. *Design and Construction of Urban Storm Water Management Systems.* ASCE Manuals and Reports of Engineering Practice No. 77, WEF Manual of Practice FD-20. American Society of Civil Engineers, New York, NY, 1992.

- University of Missouri. *Pressure Changes at Storm Drain Junctions - Engineering Bulletin No. 41.* University of Missouri, Columbia, MO, 1958.

- FHWA. *Hydraulic Design of Highway Culverts.* Hydraulic Design Series No. 5, FHWA-IP-85-15. Federal Highway Administration, U.S. Department of Transportation, Washington, DC, 1985.

CHAPTER 8 - INLETS

8.1 - Introduction

Where inlets are proposed, the City of San Antonio standard inlets with adequate reinforcing steel shall be used. All other types or designs shall be subject to the approval of the Director of TCI. This Chapter describes the considerations and design criteria for different types of storm water inlets.

8.2 - Inlet Types

Inlets may be incorporated into LID design per Section 4.3.9.

8.2.1 - Curb Inlet

A Curb Inlet is a vertical opening in the curb covered by a top slab or the upper unit. The City of San Antonio standard details shall be used.

8.2.2 - Grate Inlet

A Grate Inlet is a concrete box with a metal grate on the top that sits on the box. Use of the materials and following the dimensions that are called out in the City of San Antonio Standard Detail is recommended. Any modifications to the standard details will need to be approved by the Director of TCI. Additionally, where bicycle traffic occurs, grates should be bicycle safe.

8.2.3 - 4-Way Inlet

A 4-Way Inlet has four sides with normal six (6) inch high rectangular openings, with a 6 inch concrete top slab and a minimum 5 foot Concrete Apron around the inlet. Use of the materials and following the dimensions that are called out in the City of San Antonio Standard Detail is recommended. The maximum height of opening for the inlet is nine (9) inches, unless approved by the Director of TCI.

8.2.4 - Combination Curb Inlet and Grate Inlet

A Combination Curb Inlet and Grate is an Inlet that has a curb opening with a concrete slab and a metal grate in the gutter portion of the section. These inlets are very useful in sag conditions because if clogged by debris the curb openings act as relief valves for the clogged grates.

8.2.5 - Combination Grate and 4-Way Inlet

A Combination Grate and 4-Way inlet is the combination of the inlet described in part 8.2.3 with a grate in place of the top slab. These inlets are very useful in sag conditions where flow approaches a low spot from multiple directions.

8.2.6 - Drop Curb Opening

A Drop Curb Opening is a cut in the curb in order to allow water to drain off the roadway and into a drainage swale. The Curb Openings are located where there is no cover over the opening and the sidewalk does not abut the curb. These inlets are also known as over-side drains or curb slots. The openings come in a variety of forms from metal curb lines to concrete saw tooth openings. In most cases, an opening in the curb connects to a scour-resistant channel or concrete chute to prevent erosion.

8.2.7 - Sidewalk Drains

A Sidewalk Drain is a rectangular opening across a pathway typically made of concrete with a steel cover to convey runoff from one side to the other of the pathway. These types of inlets are typically used across sidewalks in the downtown area to capture the roof runoff from downspouts and discharge them onto the roadways. They can be used in other situations, a typical detail can be found on the City of San Antonio Standard Miscellaneous Details I in the Roadway Standards.

8.2.8 - Slotted Drain

A Slotted Drain Inlet is composed of a length of usually circular pipe with a slot cut in the top on which a metal grate opening is mounted on (see figure below). The grate is flush with the pavement at the surface and the throat is reinforced for structural integrity. The designer should ensure structural integrity if used along a roadway.

Slotted Drain Figure

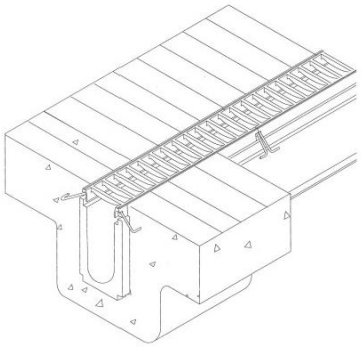

8.3 - Design Guidelines

The minimum design frequency for storm drain inlets is based on the maximum design frequency of the infrastructure that is being conveyed to the inlet or opening. Inlets and openings will be located and sized to meet the design criteria of the roadways they service, the ponds they drain to and from, and other drainage system conveyance features that they are a part of. The following formulas for inlet capacities and design guidelines are based on drop inlets on grade and at sag points. Inlet capacities for on grade inlets are less than that of inlets in sump. The capacity of on grade inlets depends on street grades, deflections, cross slopes, depressions, etc. The capacity of inlets in a sag are dependent on the water depth at the curb opening and the height of the curb opening.

8.3.1 - Curb Inlets on Grade

The capacity of inlets on grade will depend on interception capacity and the amount of carry over that is allowed. If curb inlet extensions are used with the curb inlet, they shall be place on the up gradient end of the curb inlet. If more than one extension is proposed then verification of the hydraulic capacity of the block out openings will be required to verify that the extensions have sufficient capacity to convey the required design storm to the primary curb inlet. The minimum length of curb inlet opening is 5 feet.

The following procedure is used to design curb inlets on-grade:

1. Compute depth of flow and ponded width (T) in the gutter section at the inlet.
2. Determine the ratio of the width of flow in the depressed section (W) to the width of total gutter flow (T) using Equation 8.3.1.a. Figure 8.3.1 shows the gutter cross section at an inlet.

(Equation 8.3.1a)

$$\mathbf{E_O = \frac{K_W}{K_W + K_O}}$$

E_0 = ratio of depression flow to total flow
K_W = conveyance of the depressed gutter section (cfs)
K_0 = conveyance of the gutter section beyond the depression (cfs).

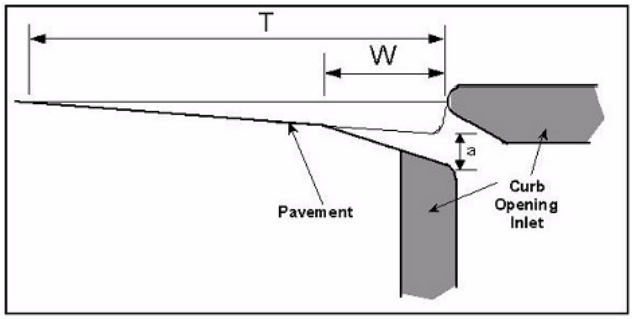

Figure 8.3.1 *- Gutter Cross-Section Diagram*

Use Equation 8.3.1.b to calculate conveyance, K_w and K_0.

(Equation 8.3.1.b)

$$K = \frac{zA^{5/3}}{nP^{2/3}}$$

K = conveyance of cross section (cfs)
z = 1.486
A = area of cross section (sq.ft.)
n = Manning's roughness coefficient
P = wetted perimeter (ft.).

Use Equation 8.3.1.c to calculate the area of cross section in the depressed gutter section.

(Equation 8.3.1.c)

$$A_W = WS_X\left(T - \frac{W}{2}\right) + \frac{1}{2}aW$$

A_w = area of depressed gutter section (sq.ft)
W = depression width for an on-grade curb inlet (ft.)
Sx = cross slope (ft./ft.)
T = calculated ponded width (ft.)
a = curb opening depression depth (ft.).

Use Equation 8.3.1.d to calculate the wetted perimeter in the depressed gutter section.

(Equation 8.3.1.d)

$$P_W = \sqrt{(WS_X + a)^2 + W^2}$$

P_w = wetted perimeter of depressed gutter section (ft.)
W = depression width for an on-grade curb inlet (ft.)
Sx = cross slope (ft./ft.)
a = curb opening depression depth (ft.).

Use Equation 8.3.1.e to calculate the area of cross section of the gutter section beyond the depression.

(Equation 8.3.1.e)

$$A_O = \frac{S_X}{2}(T - W)^2$$

A_0 = area of gutter/road section beyond the depression width (ft^2)
Sx = cross slope (ft./ft.)
W = depression width for an on-grade curb inlet (ft.)
T = calculated ponded width (ft.)

Use Equation 8.3.1.f to calculate the wetted perimeter of the gutter section beyond the depression.

(Equation 8.3.1.f)

$$P_O = T - W$$

P_0 = wetted perimeter of the depressed gutter section (ft.)
T = calculated ponded width (ft.)
W = depression width for an on-grade curb inlet (ft.).

Use Equation 8.3.1.g to determine the equivalent cross slope (S_e) for a depressed curb opening inlet.

(Equation 8.3.1.g)

$$S_e = S_X + \frac{a}{W}E_O$$

S_e = equivalent cross slope (ft./ft.)
S_x = cross slope of the road (ft./ft.)
a = gutter depression depth (ft.)
W = gutter depression width (ft.)
E_o = ratio of depression flow to total flow.

Calculate the length of curb inlet required for total interception using Equation 8.3.1.h.

(Equation 8.3.1.h)

$$L_r = zQ^{0.42}S^{0.3}\left(\frac{1}{nS_e}\right)^{0.6}$$

L_r = length of curb inlet required (ft.)
z = 0.6
Q = flow rate in gutter (cfs)
S = longitudinal slope (ft./ft.)
n = Manning's roughness coefficient
S_e = equivalent cross slope (ft./ft.).

If no bypass flow is allowed, the inlet length is assigned a nominal dimension of at least L_r, which should be an available (nominal) standard curb opening length. The exact value of L_r should not be used if doing so requires special details, special drawings, structural design, and costly construction.

If bypass flow is allowed, the inlet length is rounded down to the next available standard (nominal) curb opening length.

Determine bypass flow. In bypass flow computations, efficiency of flow interception varies with the ratio of actual length of curb opening inlet supplied (L_a) to required length (L_r) and with the depression to depth of flow ratio. Use Equation 8.3.1.i to calculate bypass flow.

(Equation 8.3.1.i)

$$Q_{CO} = Q\left(1 - \frac{L_a}{L_r}\right)^{1.8}$$

Q_{co} = carryover discharge (cfs)
Q = total discharge (cfs)
L_a = design length of the curb opening inlet (ft.)
L_r = length of curb opening inlet required to intercept the total flow (ft.).

In all cases, the bypass flow must be accommodated at some other specified point in the storm drain system.

Calculate the intercepted flow as the original discharge in the approach curb and gutter minus the amount of bypass flow.

8.3.2 - Curb Inlets in Sump

To calculate the capacity of a Curb Inlet you must first calculate if the inlet is fully submerged or partially full. This will depend on the depth of flow at the curb. If the depth of flow at the curb opening inlet is such as to cause a partially full opening, a weir effect will develop and the following formula will apply. The minimum length of curb inlet opening is 5 feet.

(Equation 8.3.2.a)

$$Q = CL(h)^{3/2}$$

Q = amount of flow in CFS
C = the weir coefficient 3.087
L = the length of drop curb opening required in feet.
h = the head or depth of water at the opening in feet (should include inlet depression 'a').

If the depth of flow at the Curb Inlet is such as to fully submerge the opening, the orifice effect will develop and the formula used shall be identical to that given under grate inlets with the exception that the head, h, on the curb opening orifice shall be taken as the depth from the top of the water surface to the center of orifice or opening; one hundred (100) percent efficiency will be allowed for curb opening inlets.

(Equation 8.3.2.b)

$$Q = CA(2gh)^{1/2}$$

Q = discharge in cubic feet per second.
C = orifice coefficient of discharge (taken as 0.70).
g = acceleration due to gravity (32.2 ft./sec.^{2})
h = head on the opening in feet from top of water surface to the center of opening
A = net area of the openings in square feet.

Curb Inlet Extensions are not allowed in sump conditions. The Hydraulic Grade Line shall be designed below the gutter elevation of the drainage structure with the Energy Grade Line below the top of curb.

8.3.3 - Grate Inlets on Grade

The interception capacity of Grate Inlets on grade depends on the cross slope, longitudinal slope, depth of flow, Manning's Roughness coefficient, and the net area of grate opening. The depth of water over the grate shall be calculated based on the cross section. A clogging factor will be applied to Grate Inlets on grade based on equation 8.3.3.h below.

Use the following procedure for grate inlets on-grade:

1. Compute the ponded width of flow (T).
2. Choose a grate type and size.
3. Find the ratio of frontal flow to total gutter flow (E_o) for a straight cross-slope using

   Equation 8.3.1.a. No depression is applied to a grate on-grade inlet.

4. Find the ratio of frontal flow intercepted to total frontal flow, R_f, using Equations 8.3.3.a, 8.3.3.b, and 8.3.3.c.

If v > vo, use the Equation below (8.3)

(Equation 8.3.3.a)

$$\mathbf{R_f = 1 - K_u(v - v_O)}$$

If v < vo, use Equation below (8.4)

(Equation 8.3.3.b)

$$\mathbf{R_f} = 1.0$$

R_f = ratio of frontal flow intercepted to total frontal flow
K_u = 0.09
v = approach velocity of flow in gutter (ft./s)
v_o = minimum velocity that will cause splash over grate (ft./s)

For triangular sections, calculate the approach velocity of flow in gutter (v) using the Equation below.

(Equation 8.3.3c)

$$\mathbf{v = \frac{2Q}{Ty} = \frac{2Q}{T^2 S_X}}$$

v = approach velocity of flow in gutter (ft./s)
Q = flow rate in gutter (cfs)
S_x = cross slope of the road (ft./ft.)
T = calculated ponded width (ft.)
T_y = max ponded depth (ft.)

Otherwise, compute the section flow area of flow and calculate the velocity using Equation 8.3.3.d.

(Equation 8.3.3.d)

$$\mathbf{v = \frac{Q}{A}}$$

v = approach velocity of flow in gutter (ft./s)
Q = flow rate in gutter (cfs)
A = the section flow area of flow (ft^2)

Calculate the minimum velocity (vo) that will cause splash over the grate using the appropriate equation in Table 10-2 below.

Table 8.3.3 - Splash-Over Velocity Calculation Equations (English)

Grate Configuration	Typical Bar Spacing (in.)	Splash-over Velocity Equation
Parallel Bars	2	$vo = 2.218+4.031L-0.649L^2+0.056L^3$
Parallel Bars	1.2	$vo = 1.762+3.11L-0.451L^2+0.033L^3$
Parallel bars w/ transverse rods	2 parallel / 4 transverse	$vo = 0.735+2.437L-0.265L^2+0.018L^3$

v_o = splash-over velocity (ft./s or m/s)

L = length of grate (ft.)

5. Find the ratio of side flow intercepted to total side flow, R_s.

(Equation: 8.3.3.e)

$$R_S = \left[1 + \frac{zv^{1.8}}{S_X L^{2.3}}\right]^{-1}$$

R_s = ratio of side flow intercepted to total flow
z = 0.15
S_x = transverse slope
v = approach velocity of flow in gutter (ft./s)
L = length of grate (ft.).

6. Determine the efficiency of grate, E_f.

(Equation 8.3.3.f)

$$E_f = [R_f E_O + R_s(1 - E_O)]$$

R_f = ratio of frontal flow intercepted to total frontal flow
E_o = ratio of depression flow to total flow.
R_s = ratio of side flow intercepted to total flow

7. When calculating the interception capacity of the grate, Q_i a reduction factor (C) due to clogging should be included. If the interception capacity is greater than the design discharge, skip step 9.

(Equation 8.3.3.g)

$$Q_i = CE_f Q = CQ[R_f E_O + R_s(1 - E_O)]$$

C = *Clogging Factor (see equation 8.3.3.h)*
E $_f$ = ratio of grate efficiency
R $_f$ = ratio of frontal flow intercepted to total frontal flow
E $_o$ = ratio of depression flow to total flow.
R $_s$ = ratio of side flow intercepted to total flow

8. Calculate the clogging factor for grate inlets on grade with multiple units using the equation below.

(Equation 8.3.3.h)

$$C = \frac{KCo}{N}$$

C = *Multiple* Unit Clogging Factor for an inlet with multiple units
C $_o$ = single unit clogging factor (50%)
e = decay ratio (0.5 for grate inlets)
N = number of units
K = *clogging coefficient from Table 8.3 below*

Table 8.3.a - Clogging Coefficients for Multiple Units

N =	1	2	3	4	5	6	7	8	>8
Grate Inlet (K)	1.0	1.5	1.8	1.9	1.9	2.0	2.0	2.0	2.0

9. Determine the bypass flow (CO) using this Equation. Remember to include the varying clogging factor for grate inlets in series.

(Equation 8.3.3.i)

$$CO = Q - Q_i$$

10. Depending on the bypass flow, select a larger or smaller inlet as needed. If the bypass flow is excessive, select a larger configuration of inlet and return to step 3. If the interception capacity far exceeds the design discharge, consider using a smaller inlet and return to step 3.

8.3.4 - Grate Inlets in Sump

Grates should be designed assuming a clogging factor of 50%. When calculating the capacity of a grate inlet the net area of opening should be used, minus 50% for the clogging assumed above when calculating its capacity. The flow of water through grate openings may be treated as the flow of water through a rectangular orifice. Use equation 8.3.2.b to calculate the inlet capacity.

(Equation 8.3.2.b)

$$Q = CA(2gh)^{1/2}$$

Q = discharge in cubic feet per second.
C = orifice coefficient of discharge (taken as 0.70).
g = acceleration due to gravity (32.2 ft./sec. ^{2})

h = head on the grate in feet.
A = 50% of net area of the openings in the grate in square feet.

8.3.5 - 4-Way Inlet

4-Way Inlets are typically proposed in sump situations. If they are fully submerged then use equation 8.3.2b to calculate the inlet capacity. The head, h, on the inlet opening orifice shall be taken as the depth from the top of the water surface to the center of orifice or opening.

8.3.6 - Combination Curb Inlet and Grate Inlet

The capacity of the grate portion should be calculated based on whether the inlet is fully submerged or it is partially submerged. If the grate portion of the inlet is fully submerged then the capacity will be calculated using the orifice equation (assuming 50% clogging). If the grate portion of the inlet is not partially submerged then it should be calculated as a weir. The capacity of the curb inlet opening portion will also be calculated using the orifice equation if it is fully submerged or by using the weir equation if is not. The depth of flow along the curb needs to be calculated prior to making the determination of partially submerged or fully submerged. The minimum length of curb inlet is 5 feet.

8.3.7 - Combination Grate and 4-Way Inlet

The capacity of the grate portion should be calculated based on whether the inlet is fully submerged or it is partially submerged. If the grate portion of the inlet is fully submerged then the capacity will be calculated using the orifice equation (assuming 50% clogging). If the grate portion of the inlet is not partially submerged then it should be calculated as a weir. The capacity of the curb inlet openings should also be calculated using the orifice equation if they are fully submerged or by using the weir equation if they are not. The depth of flow approaching the combination inlet needs to be calculated prior to making the determination of partially submerged or fully submerged.

8.3.8 - Drop Curb Opening on Grade

A drop curb opening is a curb opening where there is no cover over the opening and the sidewalk does not abut the curb opening. Where drop curb openings are used to take storm water off the streets and into drains, the length of the curb opening can be calculated following the steps in Section 8.3.1 above. The minimum length of curb opening is 5 feet.

8.3.9 - Drop Curb Opening in Sump

A drop curb opening is a curb opening where there is no cover over the opening and the sidewalk does not abut the curb opening. Where drop curb openings are used to take storm water off the streets and into drains, the length of the curb opening can be calculated from the weir formula using the coefficient of 3.087 using equation 8.3.2.a. The minimum length of curb opening is 5 feet.

Gutter line depressions will be permitted where such depressions will not hamper the flow of traffic. For amount of curb exposure, conform to City of San Antonio inlet standards.

8.3.10 - Sidewalk Drains

Slope of a Sidewalk Drain should match the slope of the sidewalk that it crosses. The capacity of the opening will be determined by using Manning's Equation.

8.3.11 - Slotted Drain

The throat of a slotted drain should be reinforced. The amount of reinforcement will be dependent on the anticipated loads that it will be subject to. Slotted drains should be oriented parallel to the flow so as to

maximize the hydraulic efficiency. Slotted drains will only be allowed within public right-of-ways with the approval of the Director of TCI. The capacity of slotted drains will be calculated using the orifice.

8.4 - Materials and Specifications

8.4.1 - Cast in Place

Cast in Place Inlets shall meet all the requirements found in latest version of the City of San Antonio Standard Specifications' Item 307 "Concrete Structures".

8.4.2 - Pre Cast

Pre-Cast Inlets shall meet all the requirements found in latest version of the City of San Antonio Standard Specifications' Item 403 "Storm Drain Junction Boxes and Inlets" or ASTM C478.

8.4.3 - Minimum Structural Loads

The minimum live load should be HS 20 for streets and E 80 for railways. Heaver live load may be needed in special cases, and the designer should determine the required live load.

8.4.4 - Grate

All Grates should meet all the requirements found in the latest version of the City of San Antonio Standard Specifications' Item 407 "Cast Iron Castings". Steel Grates and Frames need to be galvanized with hold down bolts.

8.4.5 - Sidewalk plates

Sidewalk plates can be found on the City of San Antonio Standard Roadway Details "Miscellaneous Construction Standards 1".

8.4.6 - Sidewalk Pipe Railing

All Sidewalk Pipe Railing shall be made of Galvanized Steel Pipe and shall conform to the requirements of the Standard Specifications for Steel for Bridges and Buildings, ASTM A 36, or approved equal. Additional specifications can be found in the latest version of the City of San Antonio Standard Specifications' Item 522 "Sidewalk Pipe Railing".

8.4.7 - Mud Slab

A mud slab is a base slab of low strength concrete used to level up or stabilize the bottom of an excavation for the placement of multiple inlets, multiple boxes or other structures. The mud slab is from two (2) to six (6) inches thick, or thicker if needed. The mud slab shall be wide enough and long enough to encompass all proposed inlet bottoms.

8.5 - References

- TXDOT. Storm Drains. Chapter 10 in *Hydraulic Design Manual* . Texas Department of Transportation, Revised May 2014. Retrieved from http://onlinemanuals.txdot.gov/txdotmanuals/hyd/index.htm

- City of San Antonio. *Standard Specifications for Construction.* City of San Antonio, San Antonio, Texas, June 2008. Retrieved from http://www.sanantonio.gov/TCI/CurrentVendorResources/StandardSpecificationsandDetails.aspx

• City of San Antonio Capital Improvements Management Services. *Design Guidance Manual* . City of San Antonio, San Antonio, Texas, February 2012. Retrieved from http://www.sanantonio.gov/TCI/CurrentVendorResources/DesignGuidanceManualandForms.aspx

• UDFCD. *Urban Storm Drainage Criteria Manual Volume 1.* Urban Drainage and Flood Control District, Denver, Colorado, April 2008.

• FHWA. *Urban Drainage Design Manual.* Hydraulic Engineering Circular No. 22, 3rd edition, FHWA-NHI-10-009. Federal Highway Administration, U.S. Department of Transportation, Washington, DC, Sept. 2009.1

CHAPTER 9 - OPEN CHANNELS

9.1 - Introduction

This chapter addresses proposed improvements or modifications to drainage channels and watercourses required to convey storm water runoff from or through the proposed development. Refer to section 9.3.1 for storm frequency design criteria.

Except as authorized by a development plan approved by the Director of TCI or his designee, no person shall place or cause to be placed any obstruction of any kind in any watercourse within the City and its ETJ. The owner of any property within the City, through which any watercourse may pass, shall keep the watercourse free from any obstruction not authorized by a development plan.

Planned multiple-use of a watercourse is allowed (e.g. bike paths or greenbelt). If multiple use of the watercourse is to be incorporated, the applicant shall form a property owners' association that shall assume maintenance responsibility for private amenities. The appropriate government agency will be responsible for maintenance of public amenities.

9.2 - Hydraulics Of Open Channel Flow

Hydraulic calculations shall be performed by using the U.S. Army Corps of Engineers HEC-RAS "River Analysis System" computer models. Normal depth channel calculations are permissible for constructed open channels with a uniform geometric cross section where 1) there is no potential for the water surface elevations to be controlled by backwater and 2) the channel is not in a FEMA floodplain.

Certain watersheds have hydrologic and hydraulic models that are available through the San Antonio River Authority website, Digital Data & Modeling Repository (D2MR). Developments proposed within the limits of these watersheds must have the models updated by the design engineer to reflect changes in flow, channel configuration (including alterations to vegetation) and channel structures. The design engineer's models must use the same computer program that was used in the existing model e.g. HEC-RAS or FEMA latest accepted models. The updated models shall be submitted to the Director of TCI.

The influence of gravity on fluid motion in an open channel flow can be expressed in a dimensionless quantity called a Froude Number (Fr). The Froude Number is expressed in the following equation.

(Equation 9.2)

$$\mathbf{Fr} = \frac{\mathbf{V}}{\sqrt{\mathbf{gd}}}$$

V = Mean velocity (fps)
g = Acceleration of gravity = 32.2 ft/s ^{2}
d = Hydraulic depth (ft.)

The hydraulic depth is defined as the cross sectional area of the channel perpendicular to the flow divided by the free water surface.

9.2.1 - Energy

Conservation of energy is a basic principal in open channel flow. As shown in Figure 9.2.1, the total energy at a given location in an open channel is expressed as the sum of the potential energy head (elevation), pressure head, and kinetic energy head (velocity head). The total energy at given channel cross section can be represented as:

(Equation 9.2.1.a)

$$\mathbf{E_t = Z + y + \left(\frac{V^2}{2g}\right)}$$

E $_t$ = Total energy (ft.)
Z = Elevation above a given datum (ft.) **y** = Flow depth (ft.)
V = Mean velocity (ft.)
g = Gravitational acceleration = 32.2 ft/s ^{2}

Written between an upstream cross section designated 1 and a downstream cross section designated 2, the energy equation becomes the following:

(Equation 9.2.1.b)

$$\mathbf{Z_1 + y_1 + \frac{V_1^2}{2g} = Z_2 + y_2 + \frac{V_2^2}{2g} + h_L}$$

h $_L$ = Head or energy loss between Section 1 and 2 (ft.)

The terms in the energy equation are illustrated in Figure 9.2.1. The energy equation states that the total energy head at an upstream cross section is equal to the total energy head at a downstream section plus the energy head loss between the two sections.

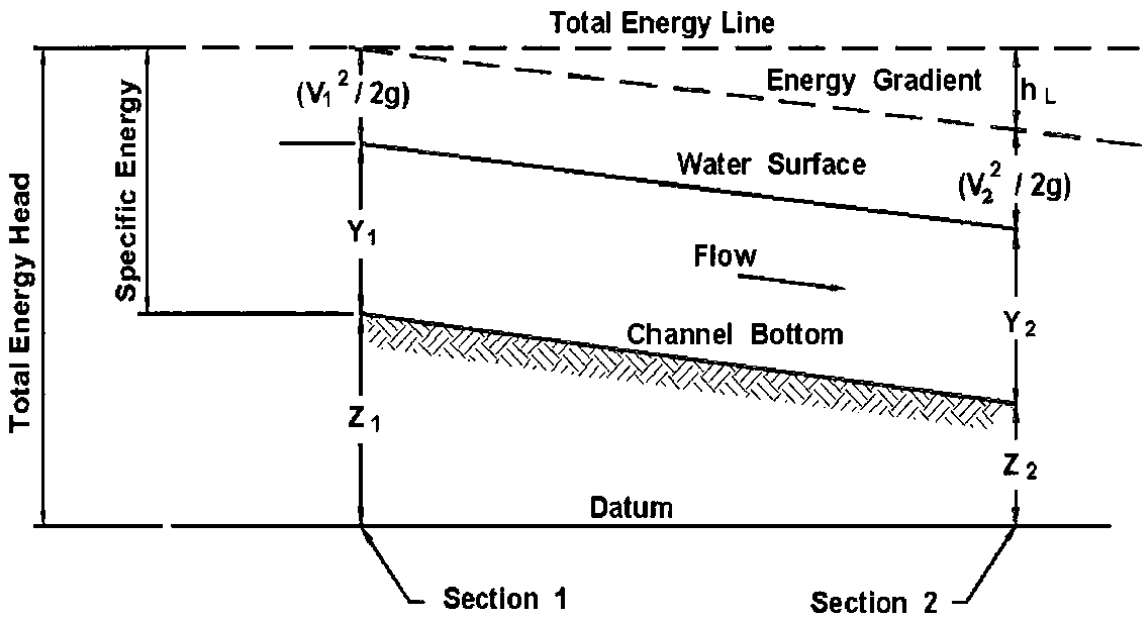

Figure 9.2.1 *Total energy in open channels*
(Source FHWA, HEC-22 Urban Drainage Design Manual, 3ed)

9.2.2 - Specific Energy

The *specific energy* of flow in a channel section is defined as the energy per pound of water measured with respect to the channel bottom. Specific energy, *E* (expressed as head in feet), is given by the following:

(Equation 9.2.2.a)

$$\mathbf{E = y + \frac{V^2}{2g} = y + \left(\frac{Q^2}{2gA^2}\right)}$$

y = depth (ft)
V = mean velocity (ft/sec)
g = acceleration of gravity = 32.2 ft/sec2
Q = discharge (cfs)
A = area of channel cross section (ft ^{2})

9.2.3 - Flow Classification

9.2.3.1 - Types of Flow in Open Channels

Open channel flow can be characterized in many ways. Types of flow are commonly characterized by variability with respect to time and space. The following terms are used to identify types of open channel flow:

Steady flow —conditions at any point in a stream remain constant with respect to time (Daugherty and Franzini 1977).

Unsteady flow —flow conditions (e.g., depth) vary with time

Uniform flow —the magnitude and direction of velocity in a stream are the same at all points in the stream at a given time (Daugherty and Franzini 1977). If a channel is uniform and resistance and gravity forces are in exact balance, the water surface will be parallel to the bottom of the channel for uniform flow.

Varied flow —discharge, depth, or other characteristics of the flow change along the course of the stream. For a steady flow condition, flow is termed *rapidly varied* if these characteristics change over a short distance. If characteristics change over a longer stretch of the channel for steady flow conditions, flow is termed *gradually varied* .

9.2.3.2 - Critical Flow

Critical flow in an open channel or covered conduit with a free water surface is characterized by the following conditions (Fletcher and Grace 1972)

1. The specific energy is a minimum for a given discharge.
2. The discharge is a maximum for a given specific energy.
3. The specific force is a minimum for a given discharge.
4. The velocity head is equal to half the hydraulic depth in a channel of small slope.
5. The Froude number is equal to 1.0 (see Equation 9.2.)
6. The velocity of flow in a channel of small slope is equal to the celerity of small gravity waves in shallow water.

If the critical state of flow exists throughout an entire reach, the channel flow is critical flow, and the channel slope is at critical slope, *Scr* . A slope less than *Scr* will cause subcritical flow, and a slope greater than *Scr* will cause supercritical flow. A flow at or near the critical state may not be stable. In design, if the depth is found to be at or near critical, the shape or slope should be changed to achieve greater hydraulic stability.

To simplify the computation of critical flow, dimensionless curves have been given for rectangular, trapezoidal, and circular channels in Figure 9.2.3.2. Critical velocity, *Vc* , can be calculated from the critical hydraulic depth, *dc* . For a rectangular channel, the flow depth is equal to hydraulic depth, (*yc* = *dc*), and the critical flow velocity is:

(Equation 9.2.3.2)

$$\mathbf{V} = \left(\mathbf{gYc}^{1/2}\right)$$

V = mean velocity (ft/sec)
g = acceleration of gravity = 32.2 ft/sec2
Yc = Critical Depth

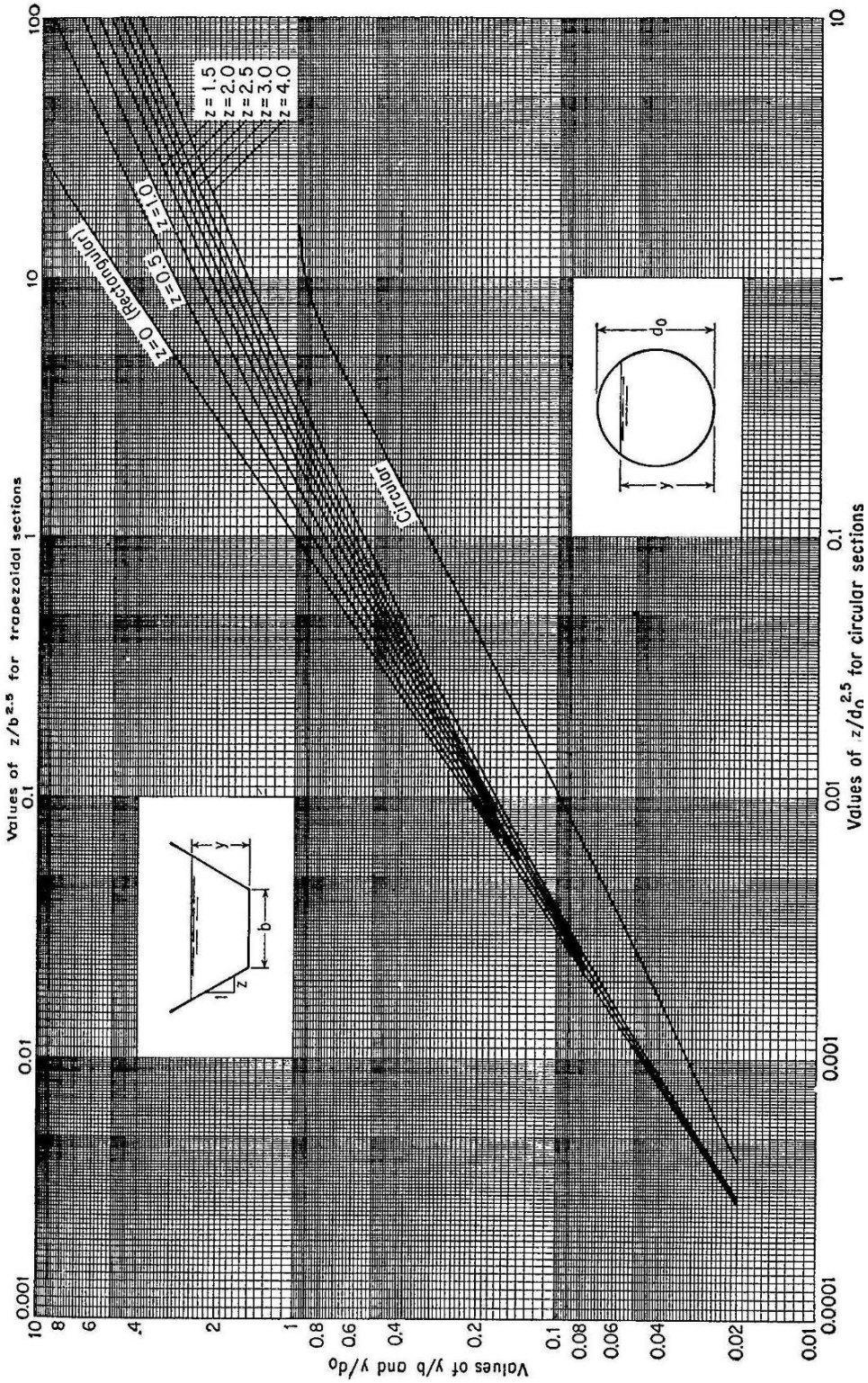

Figure 9.2.3.2 - Curves for Determining the Critical Depth in Open Channels

9.2.3.3 - Subcritical Flow

Flows with a Froude number less than 1.0 are *subcritical* flows and have the following characteristics relative to critical flows :

1. Flow velocity is lower.
2. Flow depth is greater.
3. Hydraulic losses are lower.
4. Erosive power is less.
5. Behavior is easily described by relatively simple mathematical equations.
6. Surface waves can propagate upstream.

Most stable natural channels have *subcritical* flow regimes. Consistent with the philosophy that the most successful artificial channels utilize characteristics of stable natural channels, major drainage design should seek to create channels with *subcritical* flow regimes.

9.2.3.4 - Supercritical Flow

Flows with a Froude number greater than 1.0 are supercritical flows and have the following characteristics relative to critical flows:

1. Flows have higher velocities.
2. Depth of flow is shallower.
3. Hydraulic losses are higher.
4. Erosive power is greater.
5. Surface waves propagate downstream only.

Supercritical flow in an open channel in an urban area creates hazards that the designer must consider. The minimum design depth of a channel shall be the frictional depth plus freeboard, or sequent depth without freeboard, whichever is greater.

9.2.4 - Uniform Flow

9.2.4.1 - Manning's Equation

Manning's Equation describes the relationship between channel geometry, slope, roughness, and discharge for uniform flow:

(Equation 9.2.4.1.a)

$$\mathbf{Q = \left(\frac{1.486}{n}\right) AR^{2/3} S^{1/2}}$$

Q = discharge (cfs)
n = roughness coefficient
A = area of channel cross section (ft ^{2})
P = wetted perimeter (ft.)
R = hydraulic radius = A/P(ft.)
S = channel bottom slope (ft./ft.)

Manning's Equation can also be expressed in terms of velocity by employing the continuity equation, $Q = VA$, as a substitution in Equation 9.2.4.1.a, where V is velocity (ft/sec).

For wide channels of uniform depth, where the width, ;i\i;, is at least twenty-five (25) times the depth, the hydraulic radius can be assumed to be equal to the depth, *y* , expressed in feet, and, therefore:

(Equation 9.2.4.1.b)

$$\mathbf{Q = \left(\frac{1.486}{n}\right) by^{5/3}S^{1/2}}$$

(Equation 9.2.4.1.c)

$$\mathbf{y = \frac{Q^{0.6}n^{0.6}}{1.27b^{0.6}S^{0.3}}}$$

(Equation 9.2.4.1.d)

$$\mathbf{S = \frac{((Qn)^2)}{(2.2b^2y^{3.33})}}$$

Manning's roughness coefficients ("n" values) for use in hydraulic calculations shall be consistent with the values listed in Table 9.2.4.1.

Table 9.2.4.1 - Manning's Roughness Coefficient

Channel Description	Manning's "n" Value
Concrete Lined Channel (wood float type surface finish)	0.015
Grass Lined Channel with regular maintenance	0.035
Grass Lined Channel without recent maintenance	0.050
Vegetated Channel with trees, little or no underbrush	0.055
Natural Channel with trees, moderate underbrush	0.075
Natural Channel with trees, dense underbrush	0.090
Natural Channel with dense trees and dense underbrush	0.100
Overbank Description	**Manning's "n" Value**
Pasture	0.035-0.055
Trees, little or no underbrush, scattered structures	0.060-0.075
Dense vegetation, multiple fences and structures	0.075-0.090

9.2.5 - Gradually Varied Flow

When not flowing full, water surface profiles within a culvert are generally calculated using equations that describe Gradually Varied Flow (GVF) conditions. The GVF equations account for gravitational and frictional forces acting on the water, and are used to calculate water depths throughout the culvert. A GVF profile is also known as a water depth profile and applies to steady-state, or constant flow, conditions.

Limitations of Gradually Varied Flow equation:

1. Steady State Flow
2. One Dimensional (can only calculate average cross sectional water velocity)

Steady flow —conditions at any point in a stream remain constant with respect to time *(Daugherty and Franzini 1977)* .

9.2.6 - Rapidly Varied Flow

If water depth or velocity change abruptly over a short distance and the pressure distribution is not hydrostatic, the water surface profile is characterized as Rapidly Varying Flow (RVF). The occurrence of RVF is usually a local phenomenon. RVF can often be observed near the inlet and outlet of culverts, and wherever hydraulic jumps occur.

9.2.7 - Hydraulic Jump

The hydraulic jump is a natural phenomenon that occurs when supercritical flow is forced to change to subcritical flow by an obstruction to the flow. This abrupt change in flow condition is accompanied by considerable turbulence and loss of energy. The hydraulic jump can be illustrated by use of a specific energy diagram as shown in Figure 9.2.7. The flow enters the jump at supercritical velocity, V_1, and depth, y_1, that has a specific energy of $E = y_1 + V_1^2/(2g)$. The kinetic energy term, $V^2/(2g)$, is predominant. As the depth of flow increases through the jump, the specific energy decreases. Flow leaves the jump area at subcritical velocity with the potential energy, y, predominant.

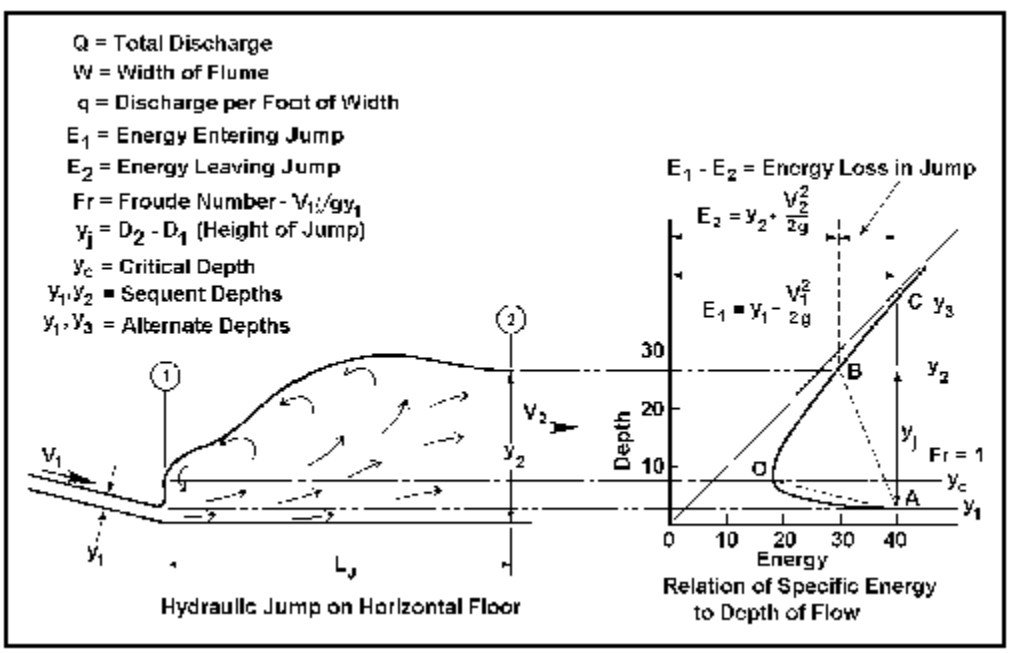

Figure 9.2.7 - Hydraulic Jump *(Source FHWA, HEC-14 Hydraulic Design of Energy Dissipators, 3ed)*

9.2.7.2 - Types of Hydraulic Jump

When the upstream Froude number, Fr, is 1.0, the flow is at critical and a jump cannot form. For Froude numbers greater than 1.0, but less than 1.7, the upstream flow is only slightly below critical depth and the change from supercritical to subcritical flow will result in only a slight disturbance of the water surface. On the high end of this range, Fr approaching 1.7, the downstream depth will be about twice the incoming depth and the exit velocity about half the upstream velocity.

The Bureau of Reclamation (USBR, 1987) has related the jump form and flow characteristics to the Froude number for Froude numbers greater than 1.7, as shown in Figure 9.2.7.2. When the upstream Froude number is between 1.7 and 2.5, a roller begins to appear, becoming more intense as the Froude number increases. This is the prejump range with very low energy loss. The water surface is quite smooth, the velocity throughout the cross section uniform, and the energy loss in the range of 20 percent.

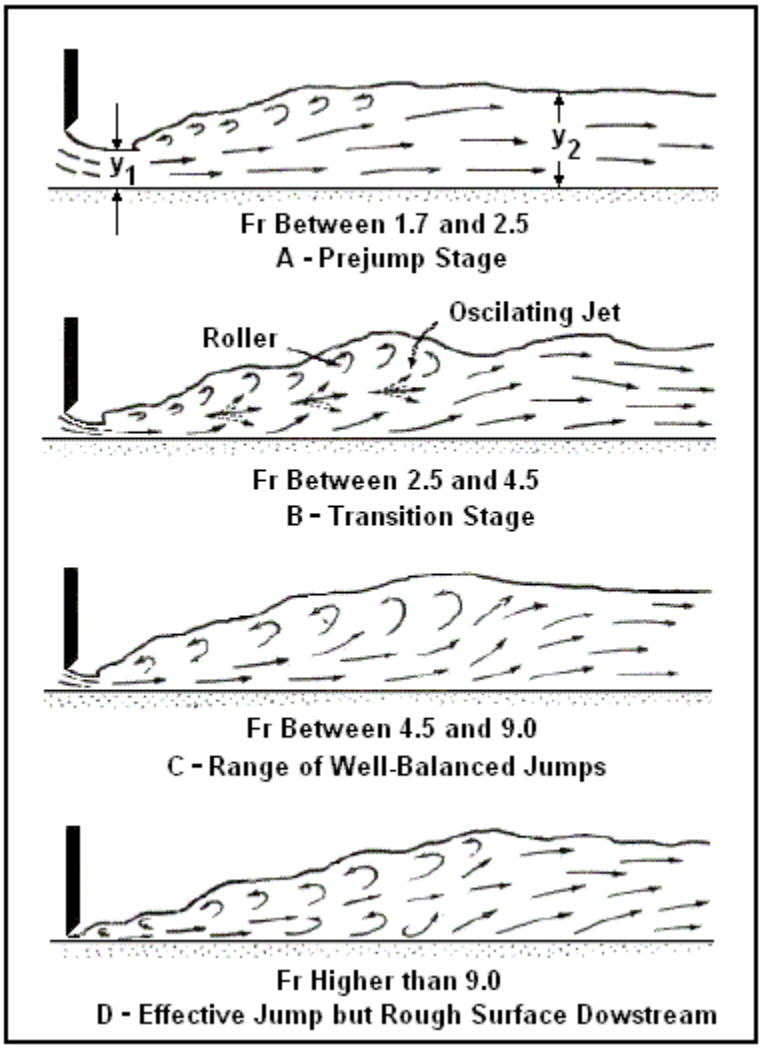

Figure 9.2.7.2 - Jump Forms Related to Froude Number (USBR, 1987)
(Source FHWA, HEC-14 Hydraulic Design of Energy Dissipators, 3ed)

An oscillating form of jump occurs for Froude numbers between 2.5 and 4.5. The incoming jet alternately flows near the bottom and then along the surface. This results in objectionable surface waves that can cause erosion problems downstream from the jump.

A well balanced and stable jump occurs where the incoming flow Froude number is greater than 4.5. Fluid turbulence is mostly confined to the jump, and for Froude numbers up to 9.0 the downstream water surface is comparatively smooth. Jump energy loss of 45 to 70 percent can be expected.

With Froude numbers greater than 9.0, a highly efficient jump results but the rough water surface may cause downstream erosion problems.

The hydraulic jump commonly occurs with natural flow conditions and with proper design can be an effective means of dissipating energy at hydraulic structures. Expressions for computing the before and after jump depth ratio (conjugate depths) and the length of jump are needed to design energy dissipators that induce a hydraulic jump. These expressions are related to culvert outlet Froude number, which for many culverts falls within the range 1.5 to 4.5.

9.2.7.3 - Hydraulic Jump in Horizontal Channels

The hydraulic jump in any shape of horizontal channel is relatively simple to analyze (Sylvester, 1964). Figure 9.2.7.3 indicates the control volume used and the forces involved. Control section 1 is before the jump where the flow is undisturbed, and control section 2 is after the jump, far enough downstream for the flow to be again taken as parallel. Distribution of pressure in both sections is assumed hydrostatic. The change in momentum of the entering and exiting stream is balanced by the resultant of the forces acting on the control volume, i.e., pressure and boundary frictional forces. Since the length of the jump is relatively short, the external energy losses (boundary frictional forces) may be ignored without introducing serious error. Also, a channel may be considered horizontal up to a slope of 18 percent (10 degree angle with the horizontal) without introducing serious error. The momentum equation provides for solution of the sequent depth, y_2, and downstream velocity, V_2. Once these are known, the internal energy losses and jump efficiency can be determined by application of the energy equation.

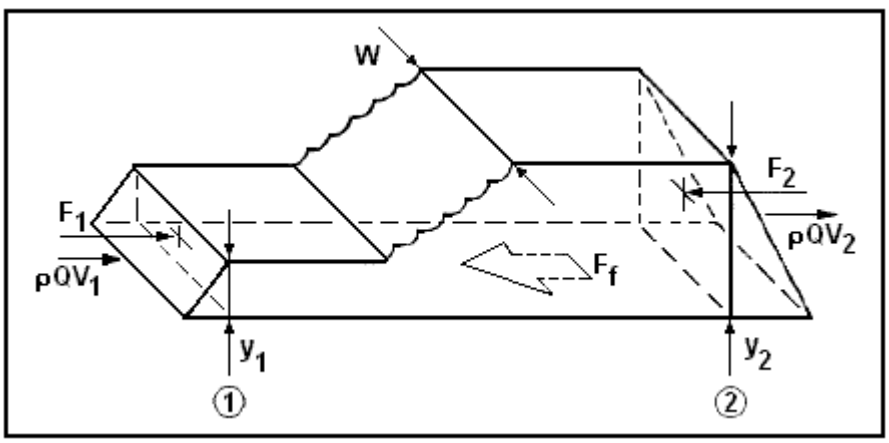

Figure 9.2.7.3. *Hydraulic Jump in a Horizontal Channel*
(Source FHWA, HEC-14 Hydraulic Design of Energy Dissipators, 3ed)

The general form of the momentum equation can be used for the solution of the hydraulic jump sequent-depth relationship in any shape of channel with a horizontal floor. Defining a momentum quantity as, $M = Q^2/(gA) + AY$ and recognizing that momentum is conserved through a hydraulic jump, the following can be written:

(Equation 9.2.7.3)

$$\frac{Q^2}{(gA_1)} + A_1Y_1 = \frac{Q^2}{(gA_2)} + A_2Y_2$$

Q = channel discharge (ft^3/s)
A_1, A_2 = cross-sectional flow areas in sections 1 and 2, respectively (ft^2)
Y_1, Y_2 = depth from water surface to centroid of cross-section area (ft)

9.3 - Design Guidelines

9.3.1 - Design Frequency

The channel(s) shall be designed for the ultimate twenty-five (25) year storm with freeboard if the drainage area to the channel is less than one hundred (100) acres. For freeboard requirements see 9.3.14. If the drainage area to the channel is more than one hundred (100) acres, the channel shall be designed for the ultimate one hundred (100) year storm.

9.3.2 - Natural Channels

Runoff that results from upstream development and is discharged to an unimproved waterway can cause flood damage to properties adjacent to the waterway. Natural undeveloped waterways do not receive regular maintenance. Design of natural waterways shall take into consideration fluvial geomorphologic principals and practices and other erosion control measures. Design engineers and development review officials shall work to resolve potential downstream impact issues.

A drivable access way shall be provided in floodplain easements for the length of the easement when regular maintenance of the floodplain is required.

9.3.3 - Constructed Channels

Modifications to existing watercourses or newly created open channels may be designed as earthen channels or as concrete lined channels. Liners other than grass or concrete which enhance the aesthetics or habitat value of the watercourse and which reduce future maintenance requirements are encouraged. Preliminary planning for the applicability of other channel liners shall be reviewed with the Director of TCI or his representative prior to the submittal of construction plans for approval.

9.3.3.1 - Earthen

The design of earthen channels shall comply with the following general requirements:

A. Freeboard consistent with Table 9.3.14 will be applied to the twenty-five (25) year design.

B. The side slope shall not be steeper than three (3) horizontal to one (1) vertical.

C. A fifteen (15) foot access road on one side of the extreme limits of the channels is required when channels do not parallel and adjoin an alley or roadway. Where utilities are installed in the access road of the channel, the access road will be widen to seventeen (17) feet. "Extreme Limits" of the channel shall mean the side slope intercept with the natural ground or proposed finished ground elevation. Where designed channel bottoms exceed one hundred (100) feet in width, the fifteen-foot access road shall be provided on both sides of the channel. The access road will slope toward the channel with a maximum cross slope of one (1) inch per foot. Additionally, the top of utility manholes within the access road to match the finish ground surface.

D. Earthen interceptor drains are for proper conveyance of upstream storm water sheet flow only. See Section 9.3.10.

E. Earthen channels shall be vegetated. See Section 16.2.1.

F. Channels with longitudinal slopes less than 0.5 percent or bottom widths greater than thirty (30) feet, concrete pilot channels shall be provided. The minimum bottom width of the pilot channel shall be six (6) feet. The minimum [earthen] slope draining toward the pilot channel shall be one (1) percent.

G. Ensure that the channel will contain the hydraulic jump (sequent depth) throughout the extent of the supercritical profile. An exception to this criteria is where concrete lined lateral channels discharge down the side slopes of channels. These channels may be designed for normal depth plus freeboard provided velocity controls are established at the main channel flow line.

H. Ensure that the energy grade of the channel will not result in upstream flooding at existing or proposed lateral facility connections.

Example: Improved channel through the proposed development with a channel flare to accept upstream storm water should be checked with a backwater model to ensure that the hydraulic grade line and energy grade line match the pre-project conditions on the adjoining/upstream property.

9.3.3.2 - Concrete

The design of concrete lined channels shall comply with the following general requirements:

A. Freeboard consistent with Table 9.3.14 will be applied to the twenty-five (25) year design.

B. From the top of the concrete lining to the top of the ditch, a side slope not steeper than three (3) horizontal to one (1) vertical shall be required; nor shall the slope be less than twelve to one (12:1). The minimum longitudinal slope shall be 0.4 percent, or 0.1 percent with a minimum "cleaning" velocity of three (3) feet per second (3 fps) during an existing conditions five (5) year storm event.

C. The depth of all toe downs shall be thirty-six (36) inches upstream, twenty-four (24) inches downstream, and eighteen (18) inches for side slopes. The City's construction inspector may permit an eighteen-inch toe down in rock subgrade in lieu of the above toe down requirements. The horizontal dimensions (thickness) of toe downs shall not be less than six (6) inches.

D. Riprap side slopes shall not be steeper than one and one-half (1½) horizontal to one (1) vertical, unless soil tests made by a geotechnical engineer show that a greater slope, or a special design, will be stable. Where vehicular traffic may travel within a horizontal distance equal to one-half (½) the vertical rise of the slope, a two-foot surcharge load shall be included in the design.

E. Fencing will be required adjacent to the channel where channel vertical wall heights exceed two (2) feet. Fencing will also be required adjacent to the channel where channel side slopes exceed two to one (2:1) and the channel depth is greater than two (2) feet. The fencing must not cause sight distance problems for motorists.

F. Vertical walls will not be permissible for depths greater than two (2) feet unless properly fenced or enclosed. Walls will have a minimum thickness of six (6) inches.

G. Ensure that the channel will contain the hydraulic jump (sequent depth) throughout the extent of the supercritical profile. An exception to this criterion is where concrete lined lateral channels discharge down the side slopes of channels. These channels may be designed for normal depth plus freeboard provided velocity controls are established at the main channel flow line.

H. Ensure that the energy grade of the channel will not result in upstream flooding at existing or proposed lateral facility connections.

Example: Improved channel through the proposed development with a channel flare to accept upstream storm water should be checked with a backwater model to ensure that the hydraulic grade line and energy grade line match the pre-project conditions on the adjoining/upstream property.

I. A fifteen (15) foot access road on one side of the extreme limits of the channels is required when channels do not parallel and adjoin an alley or roadway. Where utilities are installed in the access road of the channel, the access road will be widen to seventeen (17) feet. The access road will slope toward the channel with a maximum cross slope of one (1) inch per foot.

J. The top of utility manholes within the access road to match the finish ground surface

9.3.4 - Channel Geometry

The constructed channel geometry may be triangular, rectangular or trapezoidal in shape. The side slopes should not exceed the requirements in 9.3.3.1 or 9.3.3.2. In areas where traffic safety may be of concern, the channel side slope should be 4H:1V or flatter or other vehicular protection devices may be required.

For natural channels, the channel geometry may be irregular in shape. The channel sections should be checked for areas of erosion and provide corrective measures with the natural channel design.

9.3.5 - Channel Slope

The channel slope for constructed earthen channels shall meet the requirements of 9.3.3.1.F. The design engineer should consider the channel stability of the design slope to determine if additional protection will be needed to protect the bottom and side slopes.

For concrete channels, the channel slope shall meet the requirements of 9.3.3.2.B. For steep channel slopes, the flow maybe supercritical and the total depth of the channel should contain the sequent depth.

9.3.6 - Channel Drops

9.3.6.1 - Earthen Channels with Drops.

Retard spacing shall be computed as follows when using the City standard retard section. See Figure 9.3.6.1 and the following equations for spacing criteria:

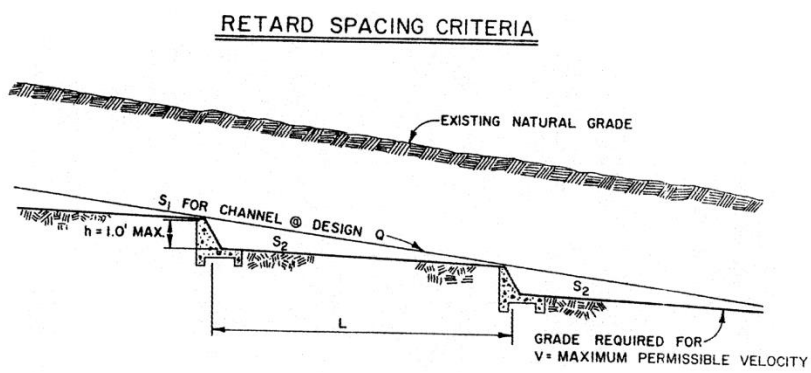

Figure 9.3.6.1 *- Retard Spacing Criteria*

(Equation 9.3.6.1.a)

$$\mathbf{L = \frac{1.0'}{S_1 - S_2}}$$

L = Distance required between retards in feet.
S $_1$ = Actual slope of channel in ft./ft.
S $_2$ = Slope of proposed channel for maximum permissible velocity established from Table 9.3.8

And

(Equation 9.3.6.1.b)

$$S_2 = \frac{NV^2}{(1.486R^{2/3})^2}$$

V = maximum permissible velocity established from Table 9.3.8
N = channel n-value - normally 0.035
R = area/wetted perimeter

9.3.6.2 - Concrete Channels with Drops

The design engineer should analyze channel drops to determine if the flow is or will become super critical along the channel. If the channel becomes super critical, the depth of the channel should contain the sequent depth.

9.3.7 - Baffle Chutes

For concrete chutes on earthen side slopes, the following should be used for the design of the baffle blocks on the chute drop. The approach velocity to the chute should be less than critical velocity. The chute slope should fall between 2H:1V to 4H:1V. The maximum flow should be 60 cfs per foot of chute width.

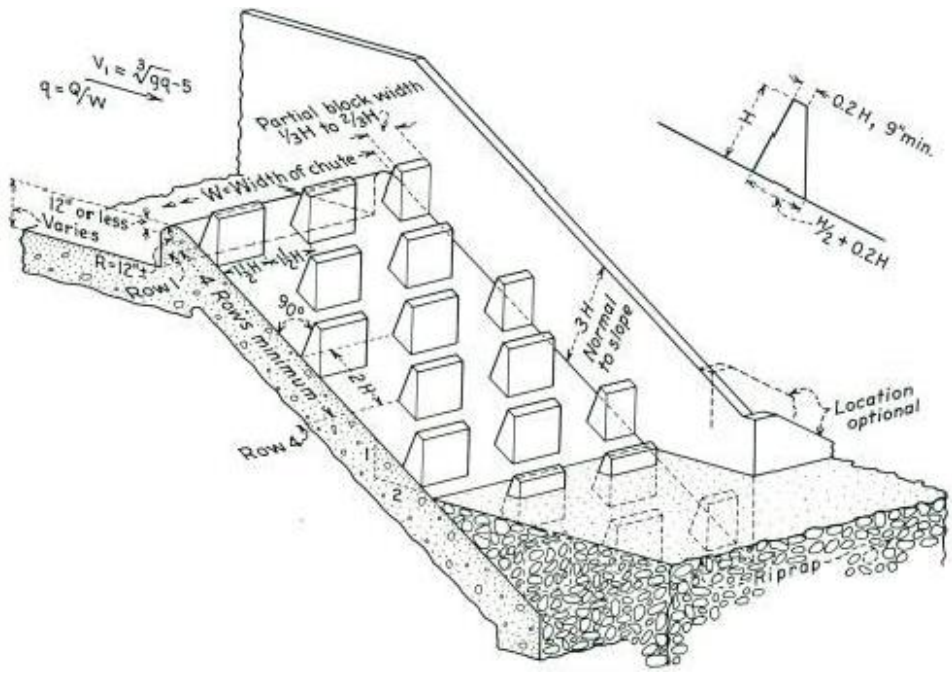

Figure 9.3.7 *USBR Type IX Baffled Apron Peterka, 1978,*
(Source FHWA, HEC-14 Hydraulic Design of Energy Dissipators)

The height of the blocks, H should range from 0.8 times the critical depth to 0.9 times critical depth. The width and spacing of the baffle block should be 1.5H, but not less than H. The chute blocks are to extend across the total width of the chute. The subsequent rows of blocks should be offset so the blocks lines up with the spacing of the upstream block. The spacing of the row of blocks should be 2H.

9.3.8 - Channel Velocity

The following Table 9.3.8 shall be used to determine maximum permissible channel velocity.

Where velocities are in the supercritical range, allowance shall be made in the design for the proper handling of the storm water.

Table 9.3.8 - Velocity Control

Velocity (fps)	Type of Facility Required	Hydraulic Radius (ft.)	Correction Factor	Maximum Permissible Velocity (fps)
1 to 6 (Maximum Average Velocity = 6 fps)	Vegetated Earthen Channel	0-1 1-3 3-5 5-8 8-10 Over 10	0.8 0.9 1.05 1.15 1.225 1.25	5 5.5 6.3 6.9 7.35 7.5
*6 to 12	Turf Reinforcement Mat (TRM)	N/A	N/A	12
6 to 8	Concrete Retards	N/A	N/A	N/A
>8	Concrete Lining or Drop Structures	N/A	N/A	N/A
**If Turf Reinforcement Mat (TMR) is proposed, please see City of San Antonio Standard Specifications for Construction Item 554 for submittal requirements. The improvement plan sheets should include the location of the placement, details, and manufacturer's installation instructions.*				

* If Turf Reinforcement Mat (TRM) is proposed, please see City of San Antonio Standard Specifications for Construction Item 554 for submittal requirements. The improvement plan sheets should include the location of placement, details, and manufacturer's installation instructions. The use of velocity protection devices other than TRM shall be submitted to and approved by the Director of TCI prior to approval of construction plans.

9.3.9 - Low Flow Channels

Earthen channels with longitudinal slopes less than 0.5 percent or bottom widths greater than thirty (30) feet, concrete pilot channels shall be provided. The minimum bottom width of the pilot channel shall be six (6) feet. The minimum [earthen] slope draining toward the pilot channel shall be one (1) percent.

9.3.10 - Interceptor Channel

Interceptor channels for proper conveyance of upstream storm water sheet flow shall be required on all subdivision plats where upstream contributing area exceeds the criteria indicated below. Interceptor channels shall be constructed prior to the issuing of building permits on any lot that would intercept natural drainage.

A. Interceptor channels shall be provided for residential subdivisions where the drainage area to the back of platted lots exceeds the depth of two (2) average residential lots with equivalent zoning.

B. Interceptor channels shall be required on nonresidential subdivision plats where the off-site drainage area contributing to the proposed development exceeds three (3) acres.

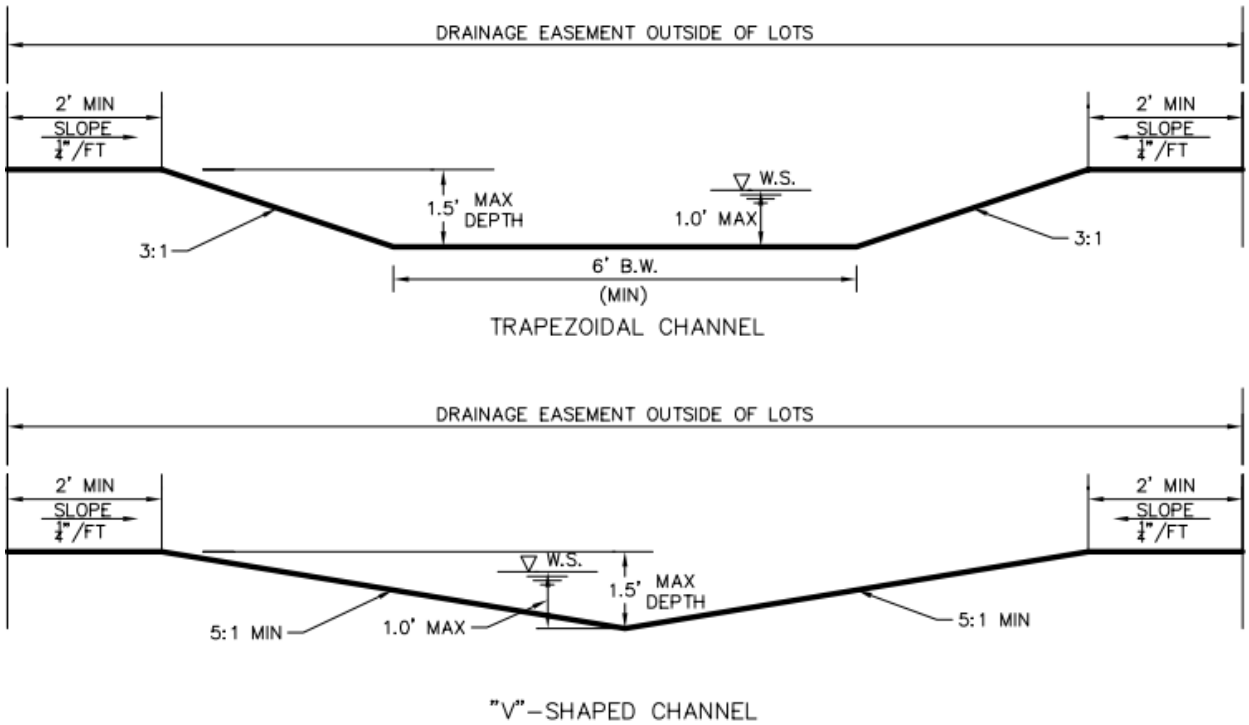

Figure 9.3.10 *- Standard for interceptor drains for intercepting sheet flow*

9.3.11 - Channel Transitions

Channel transitions can occur upstream and downstream of a culvert or bridge, with the contraction and expansion of the flow. The expansion and contraction coefficients at these transitions should be increased to account for the energy loss. An analysis of the water surface through a channel transition should be modeled if the flow is subcritical or supercritical to determine any increase in water surface that may exceed the top of channel or impact to adjoining properties.

Another channel transition to be analyzed is a drop curb opening discharging into the downstream channel. The modeling of the transition is necessary to determine if the hydraulic grade line at the property line is below the gutter and the energy line at the property line is below the top of curb.

9.3.12 - Channel Linings

The design of flexible linings described in sections 9.3.12.1, 9.3.12.2, 9.3.12.3, and 9.3.12.4 can be found in FHWA HEC-15, Design of Roadside Channels with Flexible Linings.

9.3.12.1 - Grass

The grass lined channel should have grasses as described in 17.2.1 and with good, deep root structure to stabilize the soil from erosive velocities.

9.3.12.2 - Turf Reinforcement

There are a number of turf reinforcement mats (TRM) and high performance turf reinforcement mats (HPTRM) that is available to the design engineer. Selection and installation of the TRM or HPTRM is critical to the stability of the earthen channel. The TRM will provide scour protection and enhance the vegetative root and stem development.

9.3.12.3 - Rubble Rip Rap

Rock rip rap or rubble rip rap can be used to protect against erosion downstream of energy dissipators or at other locations along the channel bottom or side slopes. The rock rip rap is placed on a filter blanket and should be hard, durable, and angular. The filter blanket is to keep the subgrade soil from migrating into the rock rip rap. The thickness of the rip rap section should be between 1.5 to 3 times the mean rip rap diameter and no less than the largest rock size. The rip rap should have a proper distribution of sizes in the gradation so that the smaller stones will fill the voids of the larger stones.

9.3.12.4 - Gabions

Gabions are rock filled wire baskets or mattresses. The gabions can be used similar to rock rip rap, but usually the size of rocks are of a smaller diameter. A filter blanket below the basket or mattress is required to keep the subgrade soil from migrating into the gabions. The gabions shall be installed per the manufacturer's instructions and proper anchoring and toe downs are required.

9.3.12.5 - Concrete

The lining of a channel with concrete may be necessary for erosive velocities, or confined channel areas.

For normal conditions, the concrete lining shall be a minimum of five (5) inches thick and reinforced with No. 3 round bars at twelve (12) inches on center each way. Where surcharge, nature of ground, height and steepness of slope, etc., become critical, design shall be in accordance with latest structural standards. All concrete lining shall develop a minimum compressive strength of not less than three thousand (3,000) pounds per square inch in twenty-eight (28) days.

9.3.13 - Channel Stability

A stable earthen channel is essential for low maintenance. The velocities shown in table 9.3.8 should not be exceeded without additional surface treatment.

There are areas within Bexar County that have non-cohesive soils and are susceptible to erosion. These non-cohesive soils may need additional surface treatment. To increase the soil stability within these soil types, a lesser velocity or different channel geometry may be needed.

9.3.14 - Freeboard

Table 9.3.14 - Drainage Freeboard for Concrete Lined and Earth Channels for Twenty-Five-Year Storm

Design Depth of Flow	Required Freeboard
0 to 5 feet	0.5 foot

5 to 10 feet	10% of design depth
10 feet and over	1.0 foot

Freeboard for earthen channels consistent with Table 9.3.14 will be applied to the twenty-five-year design.

See section 9.3.15 for additional freeboard required at channel bends and turns.

9.3.15 - Super Elevation

Channel Bends and Turns - Freeboard. Allowance for extra freeboard shall be made when the centerline radius of the channel is less than three (3) times the bottom width or for super-critical flow regime. Where bends or high velocities are involved and the flow regime is sub-critical, the applicant shall use the following formula for computing the extra freeboard:

(Equation 9.3.15)

$$d_2 - d_1 = V^2 (T + B) / 2gR$$

d1 = depth of flow at the inside of the bend in feet.
d2 = depth of flow at the outside of the bend in feet.
B = bottom width of the channel in feet.
V = the average approach velocity in the channel in feet per second.
T = width of flow at the water surface in feet.
g = 32.2 feet/second squared.
R = the center line radius of the turn or bend in feet.

A. The quantity $d_2 - d_1$ divided by two (2) shall be added to the normal depth of flow before adding the required freeboard in calculating required right-of-way widths.

B. Where sharp turns are used without curved sections, the depth required shall be large enough to provide for all head losses. Allowance shall be made for any backwater head that may result.

C. For critical and super-critical flow regimes, the extra freeboard calculated with the above formula shall be doubled.

9.3.16 - Utilities - Scour and Buoyancy

Utilities should be checked for scour depth and buoyancy of conduits that are within a floodplain or drainage channel.

9.3.16.1 - Scour

The scour analysis for the underground utility line will determine the maximum probable depth of bed scour that could expose or undercut the line. Should the analysis show the depth of scour to impact the utility line, concrete encasement or other measures may be needed to mitigate the scour.

(Equation 9.3.16.1)

$$d_s = d_m\left(\frac{V_m}{V_c} - 1\right)$$

d $_s$ = Scour Depth below stream bed (ft.)
d $_m$ = Mean Depth (ft.) - depth of flow in channel
V $_m$ = Mean velocity (fps) - velocity of flow in channel
V $_c$ = Shear velocity (fps) - competent velocity

Table 9.3.16.1 - Tentative guide to competent velocities for erosion of cohesive materials*

(after Neill, 1973, Source USBR "Computing Degradation and Local Scour", 1984)

Depth of flow (ft)	Competent mean velocity		
	Low values - easily erodible material (ft/s)	Average values (ft/s)	High values - resistant material (ft/s)
5	1.9	3.4	5.9
10	2.1	3.9	6.6
20	2.3	4.3	7.4
50	2.7	5.0	8.6

* Notes: (1) This table is to be regarded as a rough guide only, in the absence of data based on local experience. Account must be taken of the expected condition of the material after exposure to weathering and saturation. (2) It is not considered advisable to relate the suggested low, average, and high values to soil shear strength or other conventional indices, because of the predominating effects of weathering and saturation on the erodibility of many cohesive soils. (D)

9.3.16.2 - Buoyancy

The buoyancy analysis will determine the stability of the conduit in the stream bed to resist floatation. If the analysis shows possible floatation of the conduit, additional anchorage should be added.

(Equation 9.3.16.2)

$$\frac{\pi}{4}\left(B_c^2 - d^2\right)w_p + H(B_c)\left(1 - \frac{1}{g_e}\right)w_e \geq SF\left(\frac{\pi}{4}B_c^2 w_w\right)$$

$\mathbf{B}_c$ = outside pipe diameter (ft)
d = inside pipe diameter (ft)
$\mathbf{w}_p$ = unit weight of pipe material in air (lb/ft ^{3})
H = soil cover over pipe (ft)
$\mathbf{g}_e$ = specific gravity of backfill particles
$\mathbf{w}_e$ = bulk unit weight of dry backfill (lb/ft ^{3})
SF = safety factor
$\mathbf{w}_w$ = unit weight of water (lb/ft ^{3})

The following design values are suggested:
$\mathbf{w}_p$ = 150 lb/ft ^{3}
$\mathbf{g}_e$ = 2.65
$\mathbf{w}_e$ = 110 lb/ft ^{3}
SF = 1.5 if overburden is used to offset buoyancy
$\mathbf{w}_w$ = 62.4 lb/ft ^{3}

9.4 - Maintenance Considerations

See Chapter 4.12 for additional guidance on maintenance standards.

9.4.1 - Access

A drivable access way shall be provided in drainage easements for the length of the easement when regular maintenance of the floodplain is required.

Maintenance Access Right-of-Way. An unobstructed access right-of-way connecting the drainage easement with an alley or roadway parallel to or near the easement shall be provided at a minimum spacing of one (1) access right-of-way at approximately one thousand-foot intervals. The access right-of-way shall be a minimum of fifteen (15) feet in width and shall be maintained clear of obstructions that would limit maintenance vehicular access. If the flow line of the designed channel incorporates grade control structures or vehicular bridges that would prevent maintenance equipment from accessing that portion of the channel, additional access points may be required. Channel design, earthen or concrete, shall have ramps in the side slopes near the access points that would allow maintenance equipment to descend to the floor level of the channel. The maximum allowable ramp slope for vehicular access is seven to one (H7:V1). Access points adjacent to roadways or alleys shall be provided with a post and cable feature with padlock to prevent unauthorized use.

9.4.2 - Schedule

Design of new channels or alterations to existing channels shall consider future maintenance requirements. A maintenance schedule for any private channel shall be submitted to and approved by the Director of TCI prior to approval of construction plans. Maintenance requirements of concrete channels consist of de-silting activities, prevention of vegetation establishment in construction joints, and repair of concrete as necessary. Maintenance of earthen channels includes regular observation and repair, as necessary, of erosion, scouring, and removal of silt deposits, as necessary to maintain design parameters. Developers shall be responsible for maintaining newly planted channels until coverage is established throughout eighty-five (85) percent of the area. This area shall include slopes, floor, and any attendant maintenance easement. New earthen channels shall be planted with grass species per section 17.2.1. Mowing frequencies vary with the vegetation growth rates, but is required when the grass exceeds the design roughness coefficient of the channel.

9.5 - References

9.5.1 - Reference Citations

A. FHWA. *Urban Drainage Design Manual* . Hydraulic Engineering Circular No. 22, 3rd edition, FHWA-NHI-10-009. Federal Highway Administration, U.S. Department of Transportation, Washington, DC, Sept. 2009.

B. UDFCD. Major Drainage in *Urban Storm Drainage Criteria Manual Volume 1* . Urban Drainage and Flood Control District, Denver, Colorado, April 2008.

C. FHWA. *Hydraulic Design of Energy Dissipators for Culverts and Channels* . Hydraulic Engineering Circular No. 14. 3rd edition. FHWA-NHI-06-086. Federal Highway Administration, Department of Transportation, Washington, DC, July 2006.

D. US Bureau of Reclamation. *Computing Degradation and Local Scour - Technical Guideline for Bureau of Reclamation* . Bureau of Reclamation, U.S. Department of the Interior, Denver, Colorado, Jan. 1984.

9.5.2 - References

• FHWA. *Design of Roadside Channels with Flexible Linings* . Hydraulic Engineering Circular No. 15, 3 rd edition, FHWA-NHI-05-114. Federal Highway Administration, U.S. Department of Transportation, Washington, DC, Sept. 2005.

• UDFCD. Major Drainage in *Urban Storm Drainage Criteria Manual Volume 1* . Urban Drainage and Flood Control District, Denver, Colorado, April 2008.

• FHWA. *Urban Drainage Design Manual* . Hydraulic Engineering Circular No. 22, 3rd edition, FHWA-NHI-10-009. Federal Highway Administration, U.S. Department of Transportation, Washington, DC, Sept. 2009.

• AWWA. *Concrete Pressure Pipe* . AWWA Manual M9, Third Edition. American Water Works Association, Denver, CO, 2008.

• San Antonio River Authority. (September 2013) *San Antonio River Basin Regional Modeling Standards for Hydrology and Hydraulic Modeling.*

CHAPTER 10 - CULVERTS

10.1 - Introduction

The function of a culvert is to convey surface water under a highway, railroad, or other embankment. In addition to the hydraulic function, the culvert must carry construction, highway, railroad, or other traffic and earth loads. This chapter describes the hydraulic aspects of culvert design, construction and operation of culverts, and references structural aspects as they are related to the hydraulic design.

Any culvert with a clear opening of more than twenty (20) feet, measured along the center of the roadway between inside of end walls, is considered a bridge by FHWA and is designated as a bridge class culvert.

Culverts are available in a variety of sizes, shapes, and materials. These factors, along with several others, affect their capacity and overall performance. Sizes and shapes may vary from small circular pipes to extremely large box culvert sections that are sometimes used in place of bridges.

The material selected for a culvert is dependent upon various factors, including durability, structural strength, roughness, bedding condition, abrasion and corrosion resistance, and water tightness. The more common culvert materials used are concrete and steel (smooth and corrugated).

Another factor that significantly affects the performance of a culvert is its inlet configuration. The culvert inlet may consist of a culvert barrel projecting from the roadway fill or mitered to the embankment slope. Other culvert inlets have headwalls, wingwalls, and apron slabs or standard end sections of concrete.

A careful approach to culvert design is essential, both in new land development and retrofit situations, because culverts often significantly influence upstream and downstream flood risks, floodplain management, and public safety.

All-weather crossings will be required where proposed streets cross existing or proposed water courses. Culverts should be capable of allowing passage of the design storm identified in Chapter 10.3.1.

10.2 - Hydraulics of Culverts

The placement of a culvert within a stream, creek, or channel should be such that the centerline of the culvert closely aligns with the center line of the stream; while this will minimize the impact to the stream it may also skew the culvert to the roadway centerline. The placement of culvert(s) should be modeled with an appropriate hydraulic model to determine impacts both upstream and downstream of the crossing.

Existing culverts downstream of a site must be analyzed for project impacts if the culvert is within the reach downstream of the proposed development per section 4.3.1C.

10.3 - Design Guidelines

10.3.1 - Design Frequency

The culvert(s) should be designed for the ultimate twenty-five (25) year storm if the drainage area to the culvert crossing is less than one hundred (100) acres. If the drainage area to the culvert(s) is more than one hundred (100) acres, the system should be designed for the ultimate one hundred (100) year storm. Channels upstream and downstream of culverts must contain the design storm and freeboard.

10.3.2 - Inlet Control

Inlet or entrance control occurs when a culvert is capable of carrying more flow than the inlet will accept and the culvert is hydraulically steep (critical depth is greater than normal depth).

When the culvert is under inlet control, the control section is just inside the entrance of the culvert. If the flow of the culvert is a free surface flow, then critical depth will occur at or near the control section. Downstream of the control section and a free surface flow, the flow will be supercritical and a hydraulic jump may occur within the culvert.

Inlet control can become outlet control when the tail water depth is above the soffit or crown of the culvert entrance and a full flow condition exists in the culvert.

TxDOT uses a fifth-degree polynomial equation based on regression analysis to define the inlet control headwater for a given flow. This equation is used for the ratio of HWi/D greater than one-half (0.5) and less than three (3). The following equations from TxDOT are provided as a reference.

(Equation 10.3.2.a)

$$\mathbf{HW_{ic} = \left[a + bF + cF^2 + dF^3 + eF^4 + fF^5\right]D - 0.5DS_o}$$

HW $_{ic}$ = inlet control headwater (ft.)
D = rise of the culvert (ft.)
a to f = regression coefficients for each type of culvert, see TxDOT manual for coefficients
S $_o$ = culvert slope (ft./ft.)
F = function of average outflow discharge, culvert rise and width

(Equation 10.3.2.b)

$$F = 1.8113\frac{Q}{WD^{1.5}}$$

W = width of the culvert (ft.)

For the ratio of HW_i/D greater than three (3), use Equations 10.3.2.c and 10.3.2.d on the following page to estimate the headwater. Equation 10.3.2.c is an orifice equation.

(Equation 10.3.2.c)

$$HW_i = \left[\frac{Q}{k}\right]^2 + \frac{D}{2}$$

HW_i = inlet control headwater (ft.)
Q = design discharge (cfs)
k = orifice equation constant
D = culver rise (ft.)

(Equation 10.3.2.d)

$$k = 0.6325\frac{Q_{3.0}}{D^{0.5}}$$

$Q_{3.0}$ = discharge (cfs)

10.3.3 - Outlet Control

Outlet or exit control occurs when a culvert is not capable of carrying as much flow as the inlet will accept and the culvert is hydraulically mild slope (normal depth is greater than critical depth).

When the culvert is under outlet control, the hydraulic grade line inside the culvert at the entrance exceeds critical depth. The headwater of a culvert with outlet control is determined by the frictional slope, entrance and exit geometry, and tail water level.

(Equation 10.3.3.a)

$$HW_{oc} = h_e + h_{vi} + \sum h_f - S_oL + H_o - h_{va}$$

HW_{oc} = headwater depth due to outlet control (ft.)
h_{va} = velocity head of flow approaching the culvert entrance (ft.)
h_{vi} = velocity head in the entrance (ft.)
h_e = entrance head loss (ft.)
h_f = frictional head losses (ft.)
S_o = culvert slope (ft./ft.)
L = culvert length (ft.)
H_o = depth of hydraulic grade line just inside the culvert at outlet (ft.)

(Equation 10.3.3.b)

$$h_v = \left[\frac{v^2}{2g}\right]$$

h_v = velocity head (ft.)
v = velocity (fps)
g = gravitational acceleration (32.2 ft./s2)

When tail water controls, the following formula includes the exit loss.

(Equation 10.3.3.c)

$$H_o = TW + h_{TW} + h_o - h_{vo}$$

H_o = water surface at outlet
h_{vo} = velocity head inside culvert at outlet (ft.)
h_{TW} = velocity head in tail water (ft.)
h_o = exit head loss (ft.)

The outlet depth, H_o is the hydraulic grade line inside the culvert outlet. The conditions in Table 10.3.3 will determine the outlet depth.

Table 10.3.3 - Outlet Depth Conditions
(Source TxDOT, Hydraulic Design Manual, 2011)

If	And	Then
Tailwater depth (TW) exceeds critical depth (d_c) in the culvert at outlet	Slope is hydraulically mild	Set H_o using Equation 10.3.3.c, using the tailwater as the basis.
Tailwater depth (TW) is lower than critical depth (dc) in the culvert at outlet	Slope is hydraulically mild	Set Ho as critical depth.
Uniform depth is higher than top of the barrel	Slope is hydraulically steep	Set H_o as the higher of the barrel depth (D) and depth using Equation 10.3.3.c.
Uniform depth is lower than top of barrel and tail-water exceeds critical depth	Slope is hydraulically steep	Set Ho using Equation 10.3.3.c.
Uniform depth is lower than top of barrel and tail-water is below critical depth	Slope is hydraulically steep	Ignore, as outlet control is not likely.

10.3.4 - Energy Losses Through Culvert

There are four (4) different flow conditions that are considered occurring within the culvert, free surface flow, full flow in conduit, full flow at outlet and free surface flow at inlet, and free surface at outlet and full flow at inlet. These conditions are further explained on the following pages.

10.3.4.1 - Free Surface Flow - Type A

With a free surface flow occurring in the culvert a standard step backwater can be used to calculate the water surface through the culvert to the entrance. With this condition the backwater profile is based on the outlet depth. Normal depth is within the culvert.

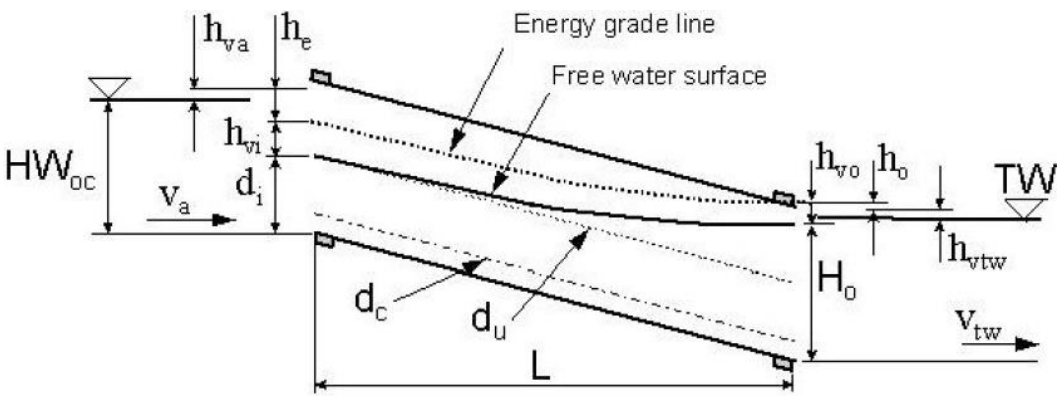

Figure 10.3.4.1 *- Outlet Control Headwater for Culvert with Free Surface (Source TxDOT, Hydraulic Design Manual, 2011)*

The headwater may be affected only when the culvert is in subcritical flow, backwater from the culvert outlet is present, and if the culvert is on a steep slope with a tail water higher than critical depth and lower than the soffit of the culvert outlet.

10.3.4.2 - Full Flow in Conduit - Type B

If the full flow condition exists within the length of the culvert then the hydraulic grade line will be at above the soffit. The hydraulic grade line at the culvert outlet is based on the outlet depth (H_o) being at or above the soffit at the outlet.

Use the Equation 10.3.4.2.c on the following page to calculate the frictional slope of the culvert. If the frictional slope is less than the culvert slope, the hydraulic grade line may drop below the soffit of the culvert. If this condition exists then the culvert flow may be Type BA.

The frictional loss through the culvert is determined by Equation 10.3.4.2.a.

To determine the hydraulic grade line at the upstream end of the culvert, at the inlet use Equation 10.3.4.2.b. To obtain the headwater elevation the entrance loss will need to be calculated. See Energy Balance at Inlet section.

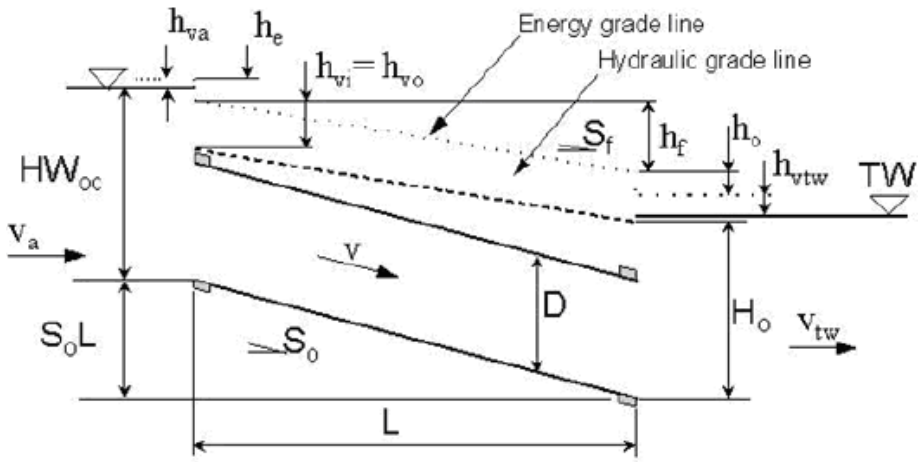

Figure 10.3.4.2 *- Outlet Control, Fully Submerged Flow*
(Source TxDOT, Hydraulic Design Manual, 2011)

(Equation 10.3.4.2.a)

$$h_f = S_f L$$

h_f = head loss due to friction in the culvert barrel, ft.
S_f = friction slope, ft. (See Equation 10.3.2.2.3)
L = length of culvert containing full flow, ft.

(Equation 10.3.4.2.b)

$$H_i = H_o + h_f - S_o L$$

H_i = depth of hydraulic grade line at inlet (ft.)
H_f = friction head losses (ft.) (calculated using Equation 10.3.2.2.1)
S_o = culvert slope (ft./ft.)
L = culvert length (ft.)
H_o = outlet depth (ft.)

(Equation 10.3.4.2.c)

$$S_f = \left(\frac{Qn}{1.486R^{2/3}A}\right)^2$$

S_f = friction slope (ft./ft.)
Q = flow in pipe (cfs)
n = Manning's 'n'-value
A = Area of the pipe (ft ^{2})
R = Hydraulic Radius (A/P_w) (ft.)

10.3.4.3 - Full Flow at Outlet and Free Surface Flow at Inlet - Type BA

If the frictional slope is less than the culvert slope and the outlet depth (H_o) is greater than the soffit of the culvert at the outlet then the culvert may flow full for a portion of its length.

First determine the length of full flow using Equation 10.3.4.3.a.

(Equation 10.3.4.3.a)

$$L_f = \frac{H_o - D}{S_o - S_f}$$

L_f = length over which full flow occurs (ft.)
S_o = culvert slope (ft./ft.)
S_f = friction slope (ft./ft.)
H_o = outlet depth (ft.)
D = Conduit barrel height (ft.)

Should the length L_f be greater than the culvert length, the culvert is flowing full for its entire length, see Type B calculations on the previous page. If the length of L_f is less than the culvert length, a free surface flow begins a point along the culvert at a distance of L_f from the culvert outlet. From this point up to the culvert inlet the water surface can be calculated using the standard step backwater method.

With the water surface (H_i) or d_i (shown on Figure 10.3.4.3 below) at the culvert inlet, the headwater elevation at the entrance can be calculated. See Energy Balance at Inlet section 10.3.5 on following page.

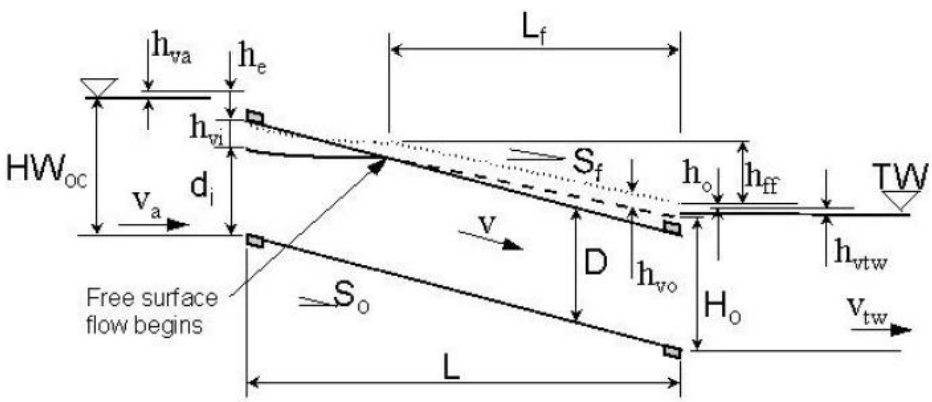

Figure 10.3.4.3 *- Point at Which Free Surface Flow Begins*
(Source TxDOT, Hydraulic Design Manual, 2011)

10.3.4.4 - Free Surface at Outlet and Full Flow at Inlet - Type AB

If the frictional slope is greater than the culvert slope and the outlet water surface H_o is less than the culvert soffit at the outlet, calculate the H_i using the following steps.

Step 1 - Start with the outlet depth H_o and

Step 2 - Use a standard step backwater to determine the point along the conduit where the water surface will intersect the soffit.

Step 3 - At this point along the culvert length, the remaining culvert length L_f is substituted for L in the Equation 10.3.4.2.b to determine h_{ff} in Figure 10.3.4.4.

Step 4 - With the hydraulic grade line at the culvert inlet, the headwater elevation at the entrance can be calculated. See Energy Balance at Inlet section for further calculations.

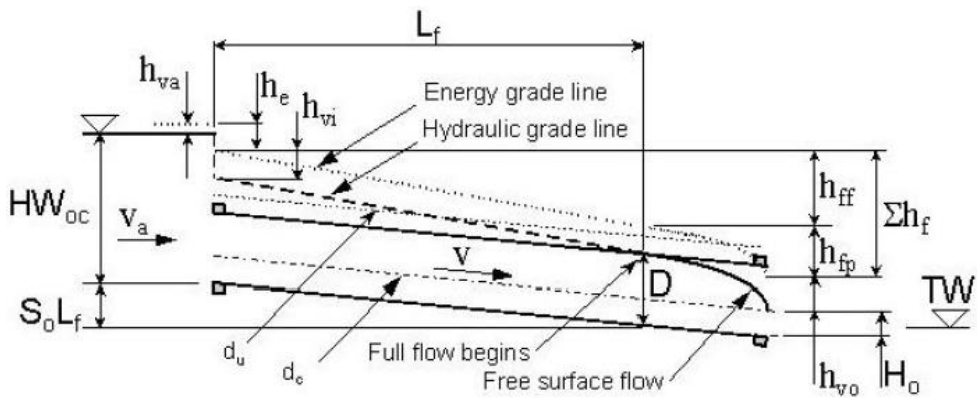

Figure 10.3.4.4 - Headwater due to Full Flow at Inlet and Free surface at Outlet
(Source TxDOT, Hydraulic Design Manual, 2011)

10.3.5 - Energy Balance at Inlet

The culvert inlet headwater (HW_{oc}) can be calculated using the energy Equation 10.3.5.a below. With the hydraulic grade line at the culvert entrance (calculated from section 10.3.4) the velocity head at the entrance (h_{vi}) can be calculated.

(Equation 10.3.5.a)

$$HW_{oc} = H_i + h_{vi} + h_e - h_{va}$$

HW_{oc} = headwater depth due to outlet control (ft.)
h_{va} = velocity head of flow approaching the culvert entrance (ft.)
h_{vi} = velocity head in the entrance (ft.) (calculated using Equation 10.3.3.b)
h_e = entrance head loss (ft.) (calculated using Equation 10.3.5.b)
H_i = depth of hydraulic grade line just inside the culvert at inlet (ft.)

Generally the approach velocity of the upstream channel to the culvert inlet can be assumed to be zero (0), thus the headwater and energy grade line are equal. This is a conservative approach for a headwater depth. The design engineer can calculate the approach velocity and determine the appropriate headwater.

The entrance loss should be calculated using Equation 10.3.5.b on the following page.

(Equation 10.3.5.b)

$$h_e = C_e \left[\frac{V_i^2}{2g}\right]$$

h_e = entrance loss
C_e = entrance loss coefficient
V_i = flow velocity inside culvert inlet (fps)

The values of C_e are shown below on Table 10.3.5.

Table 10.3.5 - Entrance Loss Coefficients (C_e)
(Source FHWA "Hydraulic Design of Highway Culverts", 3rd ed.)

Type of Structure and Design of Entrance	Coefficient C_e

Pipe, Concrete	
Projecting from fill, socket end (groove-end)	0.2
Projecting from fill, sq. cut end	0.5
Headwall or headwall and wingwalls	
Socket end of pipe (groove-end)	0.2
Square-edge	0.5
Rounded (radius = D/12)	0.2
Mitered to conform to fill slope	0.7
End-Section conforming to fill slope	0.5
Beveled edges, 33.7° or 45° bevels	0.2
Side- or slope-tapered inlet	0.2
Pipe or Pipe-Arch Corrugated Metal	
Projecting from fill (no headwall)	0.9
Headwall or headwall and wingwalls square-edge	0.5
Mitered to conform to fill slope, paved or unpaved slope	0.7
End-Section conforming to fill slope	0.5
Beveled edges, 33.7° or 45° bevels	0.2
Side- or slope-tapered inlet	0.2

Box, Reinforced Concrete	
Headwall parallel to embankment (no wingwalls)	
Square-edged on 3 edges	0.5
Rounded on 3 edges to radius of D/12 or B/12	
or beveled edges on 3 sides	0.2
Wingwalls at 30° to 75° to barrel	
Square-edged at crown	0.4
Crown edge rounded to radius of D/12 or beveled top edge	0.2
Wingwall at 10° to 25° to barrel	
Square-edged at crown	0.5
Wingwalls parallel (extension of sides)	
Square-edged at crown	0.7
Side- or slope-tapered inlet	0.2

10.3.6 - Determination of Outlet Velocity

The outlet velocity is based on the discharge and the cross sectional area at the outlet. See Equation 10.3.6.

(Equation 10.3.6)

$$v_o = \frac{Q}{A_o}$$

v_o = outlet velocity (ft/s)
Q = culvert discharge (cfs)
A_o = cross-sectional area of flow at outlet (ft^2)

There are a few conditions to consider for determining the depth (d_o) at the outlet.

If the tail water at the outlet is above the culvert outlet soffit or the culvert is flowing full due to the culvert capacity is less than the discharge, then the depth (d_o) is equal to the barrel rise (D) and the full cross sectional area of the culvert is used. See Figure 10.3.6.B on the following page.

If the tail water at the outlet is below the culvert outlet soffit, determine the critical depth of the culvert. Set the depth (d_o), to the higher of tail water or critical depth.

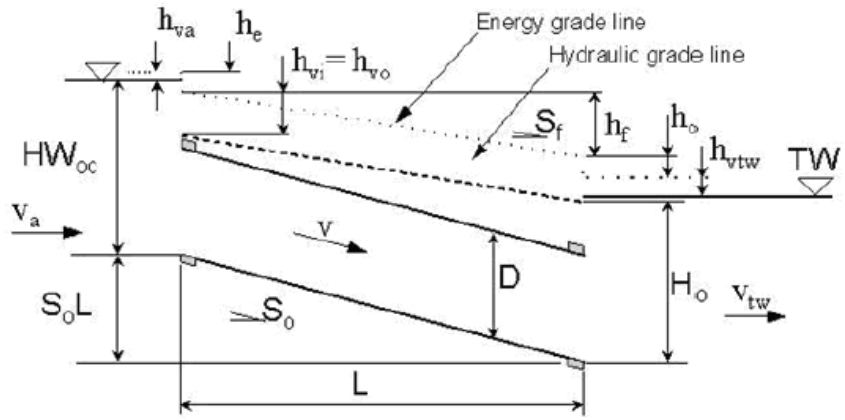

Figure 10.3.6.A - Cross Sectional Area based on the Higher of Critical Depth and Tailwater
(Source TxDOT, Hydraulic Design Manual, 2011)

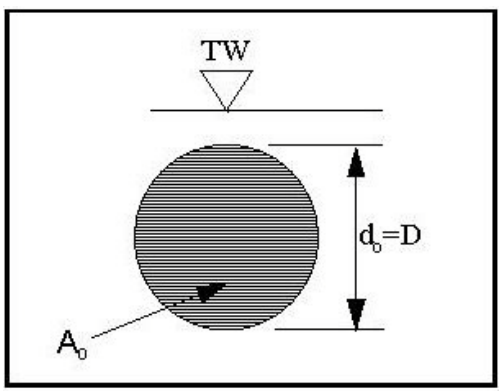

Figure 10.3.6.B - Cross Sectional Area Based on Full Flow
(Source TxDOT, Hydraulic Design Manual, 2011)

10.3.7 - Depth Estimation Approaches

For inlet control under steep slope conditions, estimate the depth at the outlet using one of the following approaches:

■ Use a step backwater method starting from critical depth (d_c) at the inlet and proceed downstream to the outlet. If the tail water is lower than critical depth at the outlet, calculate the velocity resulting from the computed depth at the outlet. If the tail water is higher than critical depth, a hydraulic jump within the culvert is possible. Section 10.3.11, Hydraulic Jump in Culverts, below discusses a means of estimating whether the hydraulic jump occurs within the culvert. If the hydraulic jump does occur within the culvert, determine the outlet velocity based on the outlet depth, $d_o = H_o$.

■ Assume uniform depth at the outlet. If the culvert is long enough and tail water is lower than uniform depth, uniform depth will be reached at the outlet of a steep slope culvert. For a short, steep culvert with tail water lower than uniform depth, the actual depth will be higher than uniform depth but lower than critical depth. This assumption will be conservative; the estimate of velocity will be somewhat higher than the actual velocity. If the tail water is higher than critical depth, a hydraulic jump is possible and the outlet velocity could be significantly lower than the velocity at uniform depth.

10.3.8 - Direct Step Backwater Method

The free flow water surface water within a culvert can be determined with the Direct Step Method describe in TxDOT "Hydraulic Design Manual". An increment (or decrement) of water depth (δd) is chosen and the corresponding distance over which the depth of change is computed. This method can be used for either supercritical or subcritical flow within a culvert.

10.3.9 - Subcritical Flow and Steep Slope

If the culvert has a free water surface with a subcritical flow at the outlet and the culvert has a steep slope, then the water depth δd is negative in the computation (decrement). If the depth of flow reaches critical depth before reaching the culvert entrance, then the culvert is under inlet control. A hydraulic jump may occur in the culvert. If the depth of flow calculated at the culvert entrance is higher than the culvert critical depth, use Equation 10.3.5.a

10.3.10 - Supercritical Flow and Steep Slope

If the culvert has supercritical flow and a steep slope, then begin the computation starting at the culvert entrance with critical depth and proceed downstream for the water surface computation. Use a decrement water depth δd in the computation. If the tail water is higher than the culvert critical depth a backwater may occur within the culvert.

10.3.11 - Hydraulic Jump in Culverts

An example of a momentum and energy plot is shown in Figure 10.3.11 on the following page. For a given discharge there are two possible depths; the first is **less than critical depth** (supercritical flow) and the other is **greater than critical depth** (subcritical flow), a sequent (or conjugate) depth. Both depths will have the same momentum with different specific energy. If you have a supercritical flow in a culvert, the possibility of hydraulic jump can occur with the proper configuration. There will be a loss in energy, ΔE as a result of the hydraulic jump.

(Equation 10.3.11)

$$\mathbf{M} = \frac{\mathbf{Q^2}}{\mathbf{gA}} + \mathbf{A\bar{d}}$$

M = momentum function
Q = discharge (cfs)
g = gravitational constant (32 ft./sec ^{2})
A = section area of flow (sq. ft.)
$\bar{d}$ = *distance from water surface to centroid of flow area (ft.)*

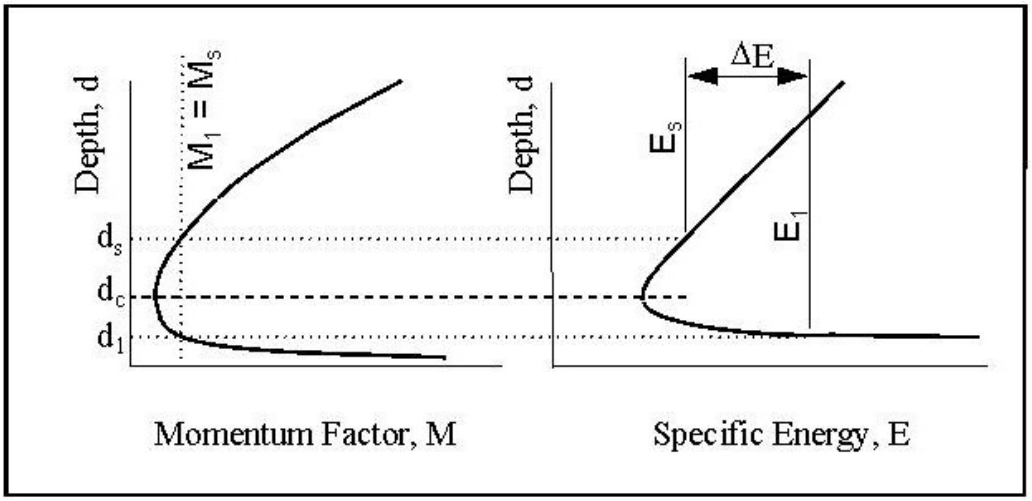

Figure 10.3.11 *- Momentum Function and Specific Energy*
(Source TxDOT, Hydraulic Design Manual, 2011)

10.3.12 - Sequent Depth

If the culvert has a free surface flow and is supercritical, sequent depth can be calculated. For slopes greater than ten percent (10%) a more complex solution is required and is provide in FHWA HEC-14 "Hydraulic Design of Energy Dissipators".

To determine sequent depth within a rectangular culvert, use Equation 10.3.12.a below.

(Equation 10.3.12.a)

$$\mathbf{d_s = 0.5d_1\left(\sqrt{1+\frac{8v_1^2}{gd_1}}-1\right)}$$

d $_s$ = sequent depth (ft.)
d $_1$ = depth of flow (supercritical) (ft.)
v $_1$ = velocity of flow at depth d (fps)

For a circular culvert the calculation to determine sequent depth is not a direct solution. An iterative solution of Equation 10.3.12.b, shown below, is used to calculate a discharge that will equal the design discharge.

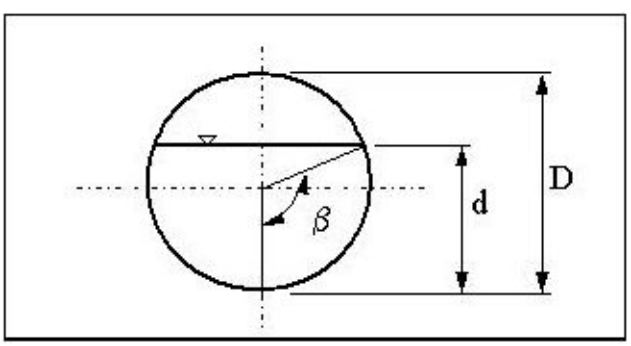

Figure 10.3.12 - Determination of Angle β *(Source TxDOT, Hydraulic Design Manual, 2011)*

(Equation 10.3.12.b)

$$Q^2 = \frac{g\left(A_s\bar{d}_s - A_1\bar{d}_1\right)}{1/A_1 - 1/A_s}$$

Q = discharge (cfs)
A_s = area of flow at sequent depth (sq.ft.)
$A_s \bar{d}_s$ = first moment of area about surface at sequent depth (cu.ft.)
$A_1 \bar{d}_1$ = first moment of area about surface at supercritical flow depth (cu.ft.)

(Equation 10.3.12.c)

$$A\bar{d} = \frac{D^3}{24}\left(3\sin\beta - \sin\beta^3 - 3\beta\cos\beta\right)$$

$A\bar{d}$ = *first moment of area about water surface (cu.ft.)*
D *= conduit diameter (ft.)*
β *= angle shown in Figure 10.3.12 and calculated using Equation 10.3.12.d.*

(Equation 10.3.12.d)

$$\beta = \cos^{-1}\left(1 - \frac{2d}{D}\right)$$

(Equation 10.3.12.e)

$$A = \frac{D^2}{8}\left[2\cos^{-1}\left(1 - \frac{2d}{D}\right) - \sin\left(2\cos^{-1}\left(1 - \frac{2d}{D}\right)\right)\right]$$

10.3.13 - Roadway Overtopping

When roadway overtopping occurs on an existing roadway, the design engineer should check the depth of flow over the roadway for the design storm and compare the depth to Figure 4.3.1C. A new development should not increase the depth of flow from the "Proceed with Caution" to "Dangerous" conditions. If this condition occurs then some culvert or other drainage improvements may be needed to mitigate this "Dangerous" condition.

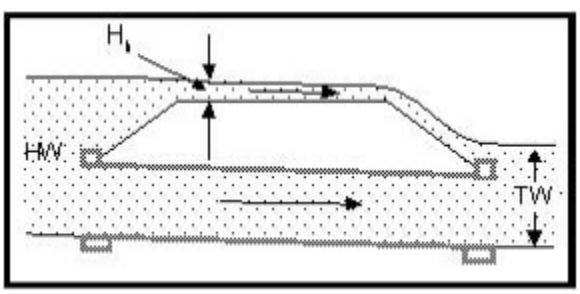

Figure 10.3.13.A - Culvert with Overtopping Flow
(Source TxDOT, Hydraulic Design Manual, 2011)

When the calculation of the culvert headwater, assuming the total discharge is going through the culverts, is above the low point of the roadway, a weir condition will develop. The calculation of the amount of flow that passes through the culvert and the remaining portion of flow that overtops the roadway is an iterative process.

Use the Weir Equation 10.3.13 to determine the average depth between headwater and low roadway elevation (H_h) for the roadway. The normal discharge coefficient for roadways should be 2.9.

(Equation 10.3.13)

$$Q = k_t C L H_h^{(1.5)}$$

Q = discharge (cfs)
k_t = over-embankment flow adjustment factor (see Figure 10.3.11.B)
C = discharge coefficient
L = horizontal length of overflow, ft. This length should be perpendicular to the over-flow direction.
H_h = average depth between headwater and low roadway elevation (ft.)

If the tail water is sufficiently high, the adjustment factor k_t would reduce the discharge over the roadway. For values of H_t/H_h below 0.8, the adjustment factor k_t is one (1). For roadway embankments as shown in Figure 10.3.13.D may need to be broken down into segments for the computation of the weir flow.

The use of HEC-RAS or other approved model can be used to determine the flow through the culvert and over the roadway.

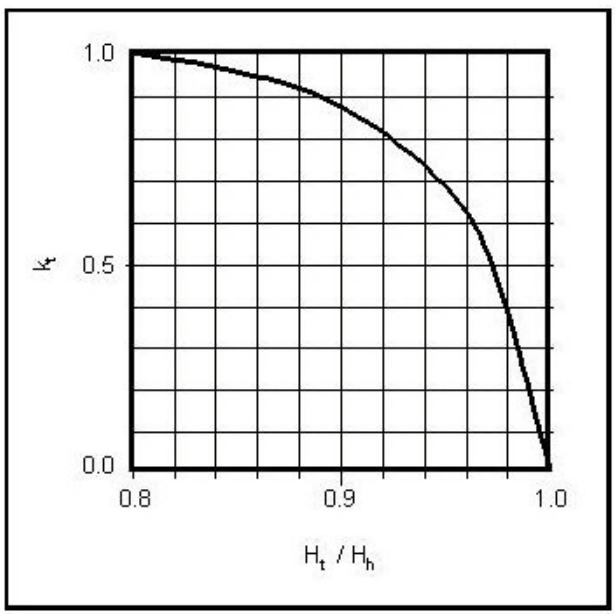

Figure 10.3.13.B - Over-Embankment Flow Adjustment Factor
(Source TxDOT, Hydraulic Design Manual, 2011)

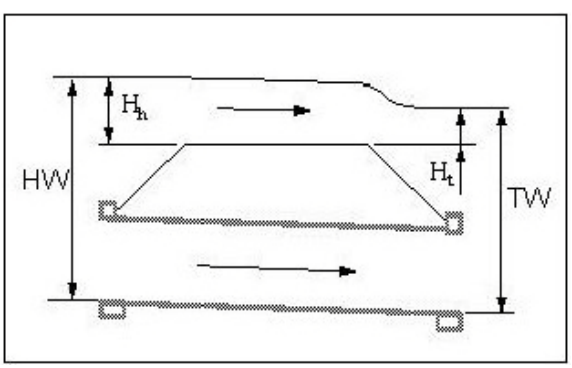

Figure 10.3.13.C - Roadway Overtopping with High Tailwater
(Source TxDOT, Hydraulic Design Manual, 2011)

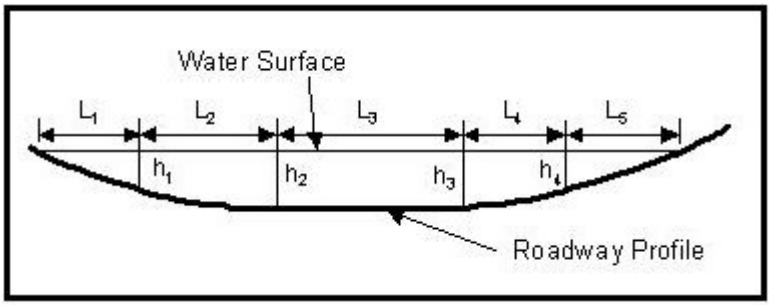

Figure 10.3.13.D - Cross Section of Flow over Embankment
(Source TxDOT, Hydraulic Design Manual, 2011)

10.3.14 - Performance Curves

The performance curve is a combination of inlet and outlet control that will vary with the discharge.

A sample plot of the headwater versus discharge for inlet and outlet control of a culvert is shown in Figure 10.3.14 below. With varying discharge the culvert system may change from inlet control to outlet control. This information is useful for a risk assessment or routing a hydrograph through a detention basin with a culvert outlet.

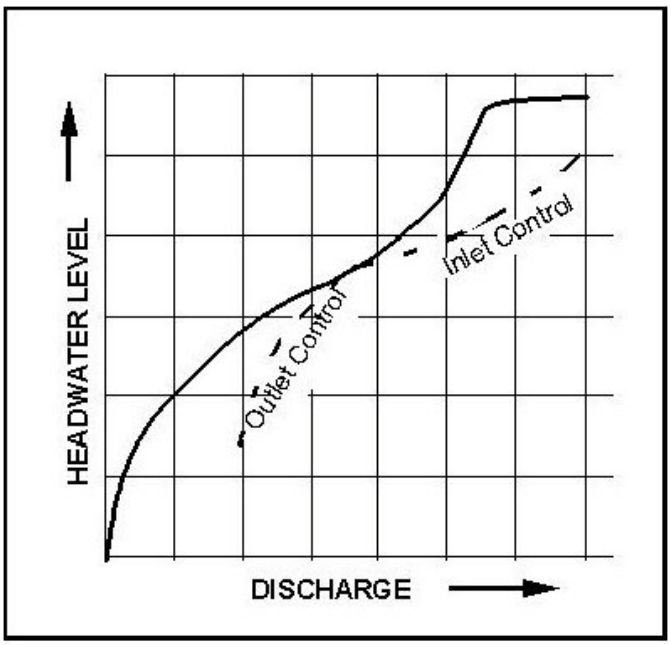

Figure 10.3.14 - Typical Performance Curve
(Source TxDOT, Hydraulic Design Manual, 2011)

10.3.15 - Exit Loss Considerations

An exit loss should be considered at the hydraulic interface between the tail water and the culvert outlet. The exit loss coefficient varies from one-half (0.5) to one (1). The starting hydraulic grade line (H_o) at the interface between the outside and inside of the culvert outlet is based on Equation 10.3.15.a below.

(Equation 10.3.15.a)

$$H_o = TW + \frac{{v_{TW}}^2}{2g} + h_o - \frac{{v_o}^2}{2g}$$

H_o = outlet depth - depth from the culvert flow line to the hydraulic grade line inside the culvert at the outlet (ft.)
v_o = culvert outlet velocity (fps)
v_{TW} = velocity in outfall (tail water velocity) (fps)
h_o = exit loss (ft.)

(Equation 10.3.15.b)

$$h_o = K\frac{{v_o}^2 - {v_{TW}}^2}{2g}$$

K = loss coefficient which typically varies from 0.5 to 1

10.3.16 - Materials and Specifications

10.3.16.1 - Pipe Material

The pipe material selected must meet all the requirements found in the latest version of the City of San Antonio Standard Specifications. The use of HDPE pipe or PVC will not be allowed crossing under City streets or within street ROW unless approved by the Director of TCI.

Corrugated metal pipe must be checked for corrosion resistance. The use of corrugated metal pipe will not be allowed crossing under City streets or within street ROW unless approval of the Director of TCI. Asphalt lining or bituminous interior coated corrugated metal pipe will not be allowed.

10.3.16.2 - Minimum Structural Loads

All roadway crossings, culverts, and bridges shall be designed for an H-20-44 or HS-20 loading. All train crossings, culverts, and bridges shall be designed for a minimum of E80 or as designated by the railroad.

10.3.16.3 - Mud Slab

A mud slab is a base slab of low strength concrete used to level up or stabilize the bottom of an excavation for the placement of multiple boxes or other structures. The mud slab is from two (2) to six (6) inches thick, or thicker if needed.

10.3.17 - Railing

The design engineer should determine the railing needed for the culvert inlet or outlet. The railing should meet applicable AASHTO, ADA or TAS design standards.

10.3.17.1 - Hand Rail

A hand rail should be used on culvert headwalls and wingwalls if the lateral drop-off is more than two (2) feet. If a traffic rail is used on top of the culvert headwall, a hand rail may still be needed on top of the traffic rail where the sidewalk abuts the culvert headwall.

10.3.17.2 - Traffic Rail

A traffic rail may be needed if the roadway is not curbed.

If overtopping of the culvert from a design storm is possible, the traffic railing should be design to minimize obstruction to the storm overtopping.

10.3.17.3 - Guard Rail

If there are no curb or traffic railing on the culvert headwall, the placement of guard rail should be used to keep vehicular traffic from encountering the lateral drop-offs at the edge of pavement. A guard rail may still be needed if a traffic railing is attached to the culvert headwall due to other conditions at the headwall location.

10.4 - Velocity Protection and Control Devices

10.4.1 - Excess Velocity

Excess velocity discharge from a culvert to earthen channel or in some instances in concrete lined channel should be minimized with the use of protection or control devices.

10.4.2 - Velocity Protection Devices

The velocity protection device used in an earthen channel should not take the place of a velocity control device but may complement a velocity control device.

There are a number of products available to the design engineer to stabilize an earthen channel, including soil retention blankets, articulated concrete blocks, and revetment mattresses. The use of these stabilizing products should be based on the velocity from the culvert outlet structure and the soil erodibility.

10.4.3 - Velocity Control Devices

The velocity control device is used to reduce excessive velocity of the culvert outlet to six (6) feet per second or less for earthen channels.

There are a number of control devices that the design engineer can select from. Table 10.4.3 is a list of possible energy dissipators to use on a project. The table has appropriate control device for super critical or subcritical flow. For dissipators not contained within the manual, refer to FHWA Hydraulic Engineering Circular No. 14 for design computations.

Table 10.4.3 Energy Dissipators and Limitations

HEC-14 Chapter	Dissipator Type	Froude Number [a] (Fr)	Allowable Debris [b]			Tailwater (TW)
			Silt/ Sand	Boulders	Floating	
4	Flow transitions	N/A	H	H	H	Desirable
5	Scour hole	N/A	H	H	H	Desirable
6	Hydraulic jump	>1	H	H	H	Required

7	Tumbling flow [c]	>1	M	L	L	Not needed
7	Increased resistance [d]	N/A	M	L	L	Not needed
7	USBR Type IX baffled apron	<1	M	L	L	Not needed
7	Broken-back culvert [d]	>1	M	L	L	Desirable
7	Outlet weir	2-7	M	L	M	Not needed
7	Outlet drop/weir	3.5-6	M	L	M	Not needed
8	USBR Type III stilling basin	4.5-17	M	L	M	Required
8	USBR Type IV stilling basin	2.5-4.5	M	L	M	Required
8	SAF stilling basin	1.7-17	M	L	M	Required
9	CSU rigid boundary basin	<3	M	L	M	Not needed
9	Contra Costa basin	<3	H	M	M	<0.5D
9	Hook basin	1.8-3	H	M	M	Not needed
9	USBR Type VI impact basin [e]	N/A	M	L	L	Desirable
10	Rip-rap basin	<3	H	H	H	Not needed
10	Rip-rap apron	N/A	H	H	H	Not needed
11	Straight drop structure [f]	<1	H	L	M	Required
11	Box inlet drop structure [g]	<1	H	L	M	Required
12	USACE stilling well	N/A	M	L	N	Desirable

[a] *At release point from culvert or channel*
[b] *Debris notes: N = None, L = Low, M = Moderate, H = Heavy*

[c] *Internal: Bed slope must be in the range of 4% < S_o < 25%*
[d] *Internal: Check headwater for outlet control*
[e] *Discharge, Q < 400 ft^3/s and Velocity, V < 50 ft/s*
[f] *Drop < 15 ft*
[g] *Drop < 12 ft*
N/A = not applicable
Source: FHWA - Hydraulic Design of Energy Dissipators for Culverts and Channels, HEC-14

10.4.3.1 - Broken Back Design

TxDOT has a complete design procedure for the use of a broken back culvert. These are used for steep culverts (culvert slope is greater than critical slope) and where the outlet section of the culvert is sufficient length and on a mild slope to make sure that the hydraulic jump occurs within the culvert. See Figures 10.4.3.1.A and 10.4.3.1.B below.

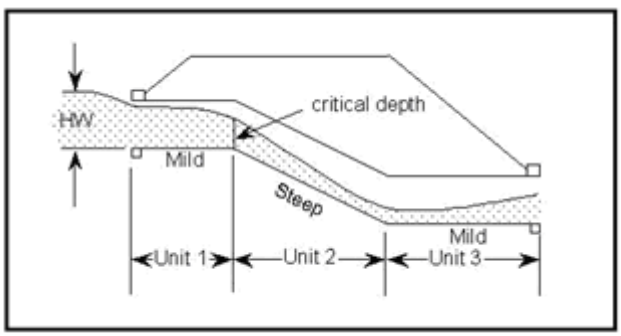

Figure 10.4.3.1.A - Three Unit Broken Back Culvert
(Source TxDOT, Hydraulic Design Manual, 2011)

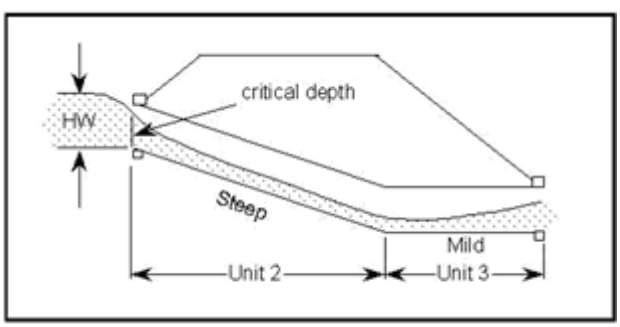

Figure 10.4.3.1.B - Three Unit Broken Back Culvert
(Source TxDOT, Hydraulic Design Manual, 2011)

The maintenance of this design should consider the location of possible silting within the culvert.

10.4.3.2 - Stilling Basin

The stilling basin is used as an energy dissipator to trigger a hydraulic jump within the basin. The basin requires a tail water condition. These stilling basins normally operate within Froude numbers from 1.7 to 17. The Saint Anthony Falls (SAF) stilling basin is shown in Figure 10.4.3.2.A on the following page.

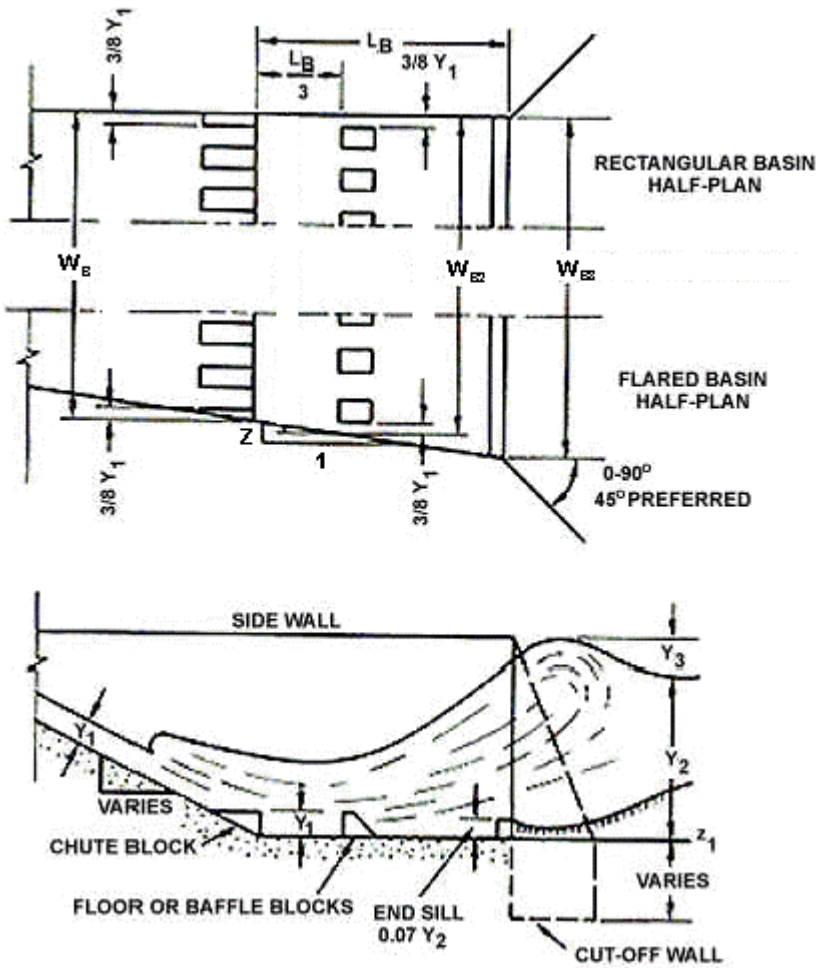

Figure 10.4.3.2.A - SAF Stilling Basin
(Source FHWA, Hydraulic Design of Energy Dissipators for Culverts and Channels, 2006)

The following is for the design of a SAF stilling basin. For the design of other stilling basins, refer to FHWA HEC14.

The following are seven (7) design steps used for a SAF basin.

Step 1. Determine the velocity and depth at the culvert outlet. For the culvert outlet, calculate culvert brink depth (y_o) velocity (V_o) and (Fr_o.) For subcritical flow, use Figure 10.4.3.2.B or Figure 10.4.3.2.C found on the following pages. For supercritical flow, use normal depth in the culvert for y_o. (See FHWA HDS 5 (Normann, et al., 2001) for additional information on culvert brink depths.)

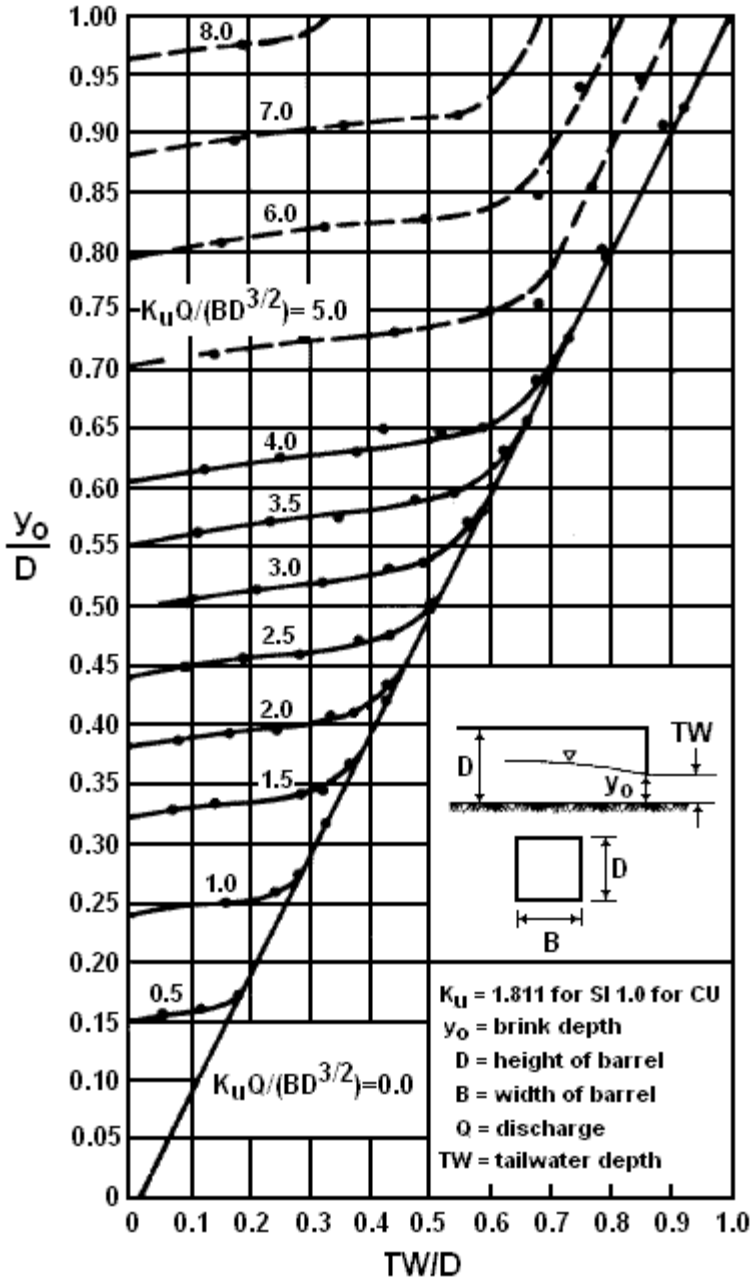

Figure 10.4.3.2.B - Dimensionless Rating Curves for the Outlets of rectangular Culverts on Horizontal and Mild Slopes
(Simnos, 1970, Source FHWA, Hydraulic Design of Energy Dissipators for Culverts and Channels, 2006)

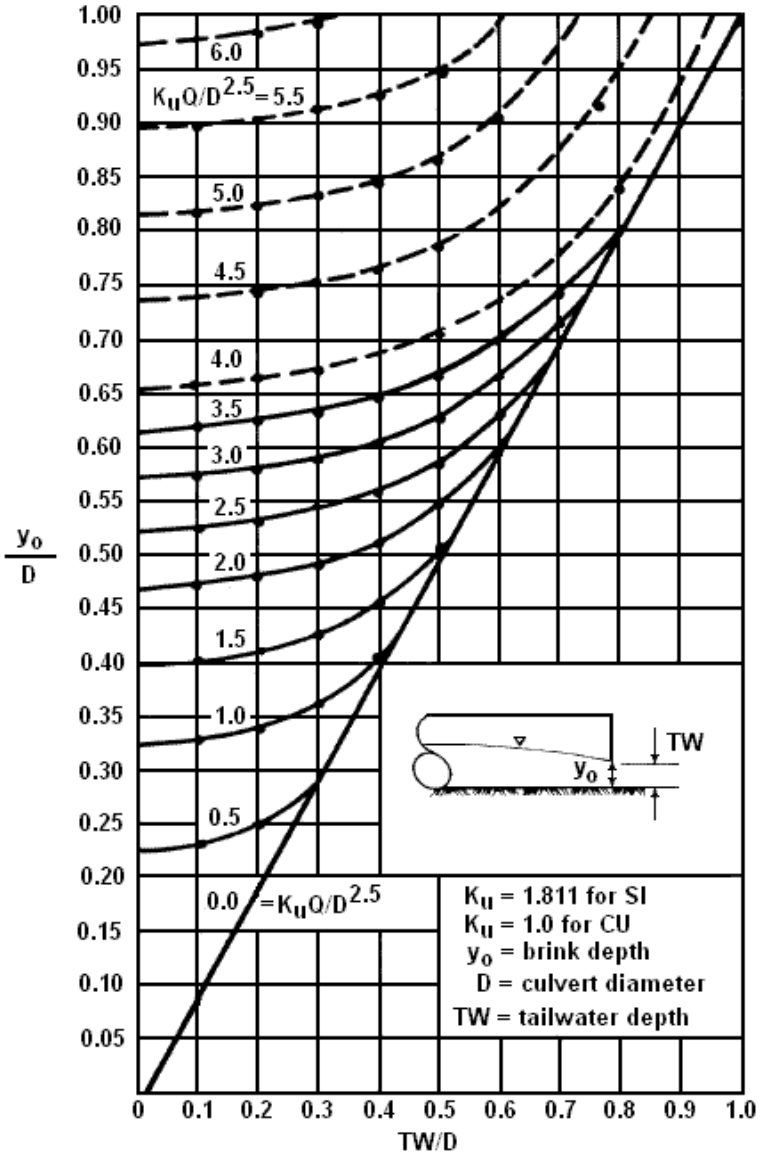

Figure 10.4.3.2.C - Dimensionless Rating Curves for the Outlets of Circular Culverts on Horizontal and Mild Slopes
(Simnos, 1970, Source FHWA, Hydraulic Design of Energy Dissipators for Culverts and Channels, 2006)

Step 2. Determine the velocity and TW depth in the receiving channel downstream of the basin.

Step 3. Estimate the conjugate depth for the culvert outlet conditions using Equation 10.4.3.2.a to determine if a basin is needed. Substitute y_o and Fr_o for y_1 and Fr_1, respectively. The value of C is dependent, in part, on the type of stilling basin to be designed. However, in this step the occurrence of a free hydraulic jump without a basin is considered so a value of one (1) is used. Compare y2 and TW. If y2 < TW, there is sufficient tail water and a jump will form without a basin. The remaining steps are unnecessary.

(Equation 10.4.3.2.a)

$$y_2 = \frac{C_{TW} y_1}{2}\left(\sqrt{1 + 8Fr_1^2} - 1\right)$$

y_2 = conjugate depth (ft.)
y_1 = depth approaching the jump (ft.)
C_{TW} = ratio of tail water to conjugate depth (TW/y_2)
Fr_1 = approach Froude number

Step 4. The design engineer should select a basin width (W_B). For box culverts, W_B must equal the culvert width (W_o). For circular culverts, the basin width is taken as the larger of the culvert diameter and the value calculated according to the following Equation:

(Equation 10.4.3.2.b)

$$W_B = 1.7D_o\left(\frac{Q}{g^{0.5}D_o^{2.5}}\right)$$

W_B = basin width (ft.)
Q = design discharge (fps)
D_o = culvert diameter (ft.)

The basin can be flared to fit an existing channel as indicated on Figure 10.4.3.2. The sidewall flare dimension z should not be greater than 0.5, i.e., 0.5:1, 0.33:1, or flatter.

Step 5. Compute conjugate depth (C) is a function of Froude number as given by the following set of equations. Depending on the Froude number, C ranges from 0.64 to 1.08 implying that the SAF basin may operate with less tail water than the USBR basins, though tail water is still required.

(Equation 10.4.3.2.c - When $1.7 < FR_1 < 5.5$)

$$C = 1.1 - \frac{Fr_1^2}{120}$$

(Equation 10.4.3.2.d - When $5.5 < FR_1 < 11$)

$$C = 0.85$$

(Equation 10.4.3.2.e - When $11 < FR_1 < 17$)

$$C = 1.0 - \frac{Fr_1^2}{800}$$

The determination of the basin length, L_B, using Equation 10.4.3.2.f below.

(Equation 10.4.3.2.f)

$$L_B = \frac{4.5y_2}{CFr_1^{0.76}}$$

Step 6. Determine the needed radius of curvature for the slope changes entering the basin using Equation 10.4.3.2.g found below. The design engineer should determine if this step is required for the transition between the channel or culvert at the top of the drop to the transition slope and from the transitions slope to the bottom of the stilling basin floor. The curved slope change would provide improved flow conditions at the top and bottom of the drop.

If the transition slope is 1H:0.5V or steeper, use a circular curve at the transition with a radius defined by Equation 10.4.3.2.g (Meshgin and Moore, 1970). It is also advisable to use the same curved transition going from the transition slope to the stilling basin floor.

(Equation 10.4.3.2.g)

$$\mathbf{r} = \frac{\mathbf{y}}{e^{\frac{1.5}{Fr^2}} - 1}$$

r = radius of the curved transition (ft.)
Fr = Froude number
y = depth approaching the curvature (ft.)

For the curvature between the culvert outlet and the transition, the Froude number and depth are taken at the culvert outlet. For the curvature between the transition and the stilling basin floor, the Froude number and depth are taken as Fr_1 and y_1.

Step 7. Sizing the basin elements (chute blocks, baffle blocks, and an end sill), the following guidance is recommended. The height of the chute blocks (h_1) is set equal to y_1. The number of chute blocks is determined by Equation 10.4.3.2.h, below, rounded to the nearest integer.

(Equation 10.4.3.2.h)

$$\mathbf{N_c} = \frac{\mathbf{W_B}}{\mathbf{1.5y_1}}$$

$\mathbf{N_c}$ = number of chute blocks

Block width and block spacing are determined by the equation on the following page:

(Equation 10.4.3.2.i)

$$\mathbf{W_1} = \mathbf{W_2} = \frac{\mathbf{W_B}}{\mathbf{2N_c}}$$

$\mathbf{W_1}$ = block width (ft.)
$\mathbf{W_2}$ = block spacing (ft.)

Equations 10.4.3.2.h and 10.4.3.2.i will provide N_c blocks and N_c spaces between those blocks. A one-half block (.05) is placed at the basin wall so there is no space at the wall. The height, width, and spacing of the baffle blocks are shown in Figure 10.4.3.2.A. The height of the baffles (h_3) is set equal to the entering flow depth (y_1). The width and spacing of the baffle blocks must account for any basin flare. If the basin is flared as shown in Figure 10.4.3.2.A, the width of the basin at the baffle row is calculated according to the following equation:

(Equation 10.4.3.2.j)

$$\mathbf{W_{B2}} = \mathbf{W_B} + \left(\frac{\mathbf{2zL_B}}{\mathbf{3}}\right)$$

$\mathbf{W_{B2}}$ = basin width at the baffle row (ft.)
$\mathbf{L_B}$ = basin length (ft.)
z = basin flare, z:1 as defined in Figure 10.4.3.2.A (z=0.0 for no flare)

The top thickness of the baffle blocks should be set at $0.2h_3$ with the back slope of the block on a 1:1 slope. The number of baffles blocks is calculated using the following equation :

(Equation 10.4.3.2.k)

$$N_B = \frac{W_{B2}}{1.5y_1}$$

N_B = number of baffle blocks (rounded to an integer)

Baffle width and spacing are determined using the following equation:

(Equation 10.4.3.2.l)

$$W_3 = W_4 = \frac{W_{2B}}{2N_B}$$

W_3 = baffle width (ft.)
W_4 = baffle spacing (ft.)

Equations 10.4.3.2.k and 10.4.3.2.l will provide N_B baffles and N_B-1 spaces between those baffles. The remaining basin width is divided equally for spaces between the outside baffles and the basin sidewalls. No baffle block should be placed closer to the sidewall than $3y_1/8$. Verify that the percentage of W_{B2} obstructed by baffles is between forty and fifty-five percent (40-55%). The distance from the downstream face of the chute blocks to the upstream face of the baffle block should be LB/3.

The height of the final basin element is calculated using the following equation:

(Equation 10.4.3.2.m)

$$h_4 = \frac{0.07y_2}{C}$$

h_4 = height of the end sill (ft.)

The end sill will extend across the basin.

Wingwalls should be equal in height and length to the stilling basin sidewalls. The top of the wingwall should have a 1H:1V slope. Flaring wingwalls are preferred to perpendicular or parallel wingwalls. The best overall conditions are obtained if the triangular wingwalls are located at an angle of forty-five degrees (45°) to the outlet centerline.

The stilling basin sidewalls may be parallel (rectangular stilling basin) or diverge as an extension of the transition sidewalls (flared stilling basin). The height of the sidewall above the floor of the basin is given by the equation below :

(Equation 10.4.3.2.n)

$$h_5 \geq y_2\left(1 + \frac{1}{3C}\right)$$

h_5 = height of the sidewall (ft.)

A cutoff wall should be used at the end of the stilling basin to prevent undermining. The depth of the cutoff wall must be greater than the maximum depth of anticipated erosion at the end of the stilling basin. The cutoff wall, toe down, to be a minimum depth of twenty-four (24) inches.

10.4.3.3 - Contra Costa Basin

The Contra Costa Basin could be used for a culvert outlet with some tail water. The Contra Costa Basin was developed at the University of California, Berkeley, in conjunction with the Contra Costa County, California. This basin is best suited to where the depth of flow at the outlet is equal to one-half (0.5) the culvert height.

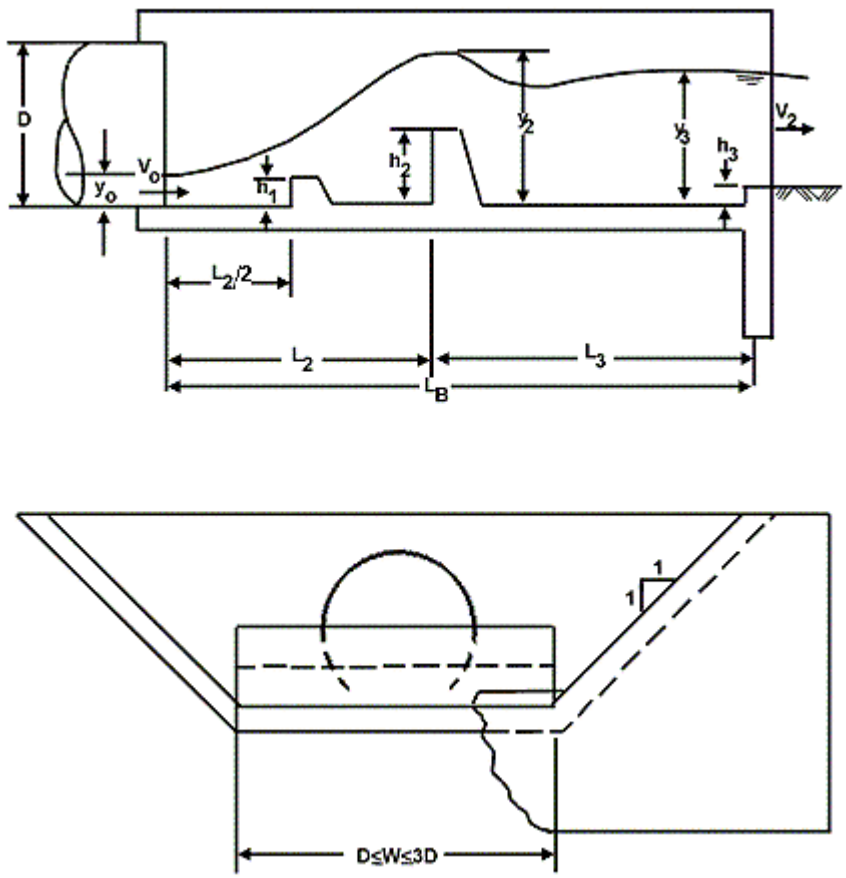

Figure 10.4.3.3.A - Contra Costa Basin (Source FHWA, Hydraulic Design of Energy Dissipators for Culverts and Channels, 2006)

The following equation was tested with L_2/h_2 ratios from 2.5 to 7, and is in terms of culvert exit velocity (Vo) and depth (yo) for a circular culvert.

(Equation 10.4.3.3.1)

$$\frac{L_2}{h_2} = 1.2Fr^2\left(\frac{h_2}{y_o}\right)^{-1.83}$$

y_o = outlet depth (ft.)
V_o = outlet velocity (ft/s)
Fr = $Vo/(g\ y_o)^{1/2}$
h_2 = height of large baffle (ft.)
L_2 = length from culvert exit to large baffle (ft.)

The following are steps for designing a Contra Costa basin:

Step 1. Determine the flow conditions at the outfall of the culvert for the design discharge. If the depth of flow at the outlet, y_o, is D/2 or less, the Contra Costa basin is applicable.

Step 2. Compute equivalent depth, y_e, and Froude number, Fr.

y_e = y_o for rectangular culvert
y_e = (A/2)1/2 for other shapes
Fr = V_o / (gy_e)1/2

Step 3. The width of the basin floor, W_B, is selected to conform to the natural channel, but must be $1W_o$ to $3W_o$. If there is no defined channel, the width should be no greater than 3 times the culvert width. The basin side slopes should be 1:1.

Step 4. Assume a value of L_2/h_2 between 2.5 and 7. If $L_2/h_2 = 3.5$, use Equation 10.4.3.3.3 to determine h_2. Use Equation 10.4.3.3.2-A or Equation 10.4.3.3.2-B for other values. Calculate $L_2 = 3.5\ h_2$. Calculate the first baffle height, $h_1 = 0.5h_2$ and position, $L_1 = 0.5L_2$.

The following equation is generalized from the previous equation for other shapes by substituting y_e (equivalent flow depth) for y_o.

(Equation 10.4.3.3.2-A)

$$\frac{L_2}{h_2} = 1.35Fr^2\left(\frac{h_2}{y_e}\right)^{-1.83}$$

(Equation 10.4.3.3.2-B)

$$\frac{h_2}{y_e} = \left(\frac{1.35Fr^2}{\frac{L_2}{h_2}}\right)^{0.546}$$

y_e = equivalent depth, $(A/2)^{1/2}$ (ft.)
A = outlet flow area (ft^2)
V_o = outlet velocity (ft./s)
Fr = V_o / $(g\ y_e)^{1/2}$

With use of recommended $L_2/h_2 = 3.5$ value, we get:

(Equation 10.4.3.3.3)

$$\frac{h_2}{y_e} = 0.595Fr^{1.092}$$

Step 5. Determine the length from the large baffle to the end sill (L_3) using Equation 10.4.3.3.4 below. If necessary, repeat the procedure until a dissipator is defined which optimizes the design requirements.

(Equation 10.4.3.3.4)

$$\frac{L_3}{L_2} = 3.75\left(\frac{h_2}{L_2}\right)^{0.68}$$

The height of the small baffle (h_1) is one-half (0.5) the height of the large baffle (h_2). The position of the small baffle is half way between the culvert outlet and the large baffle or $L_2/2$. The height of the end sill (h3) may vary from $0.06y_2$ to $0.10y_2$.

For basins with $W_b/W_o = 2$ (end width is twice the outlet width), an approximate maximum water surface depth (y2) without tail water, can be obtained by using the

(Equation 10.4.3.3.5)

$$\frac{y_2}{h_2} = 1.3\left(\frac{L_2}{h_2}\right)^{0.36}$$

Step 6. Estimate the approximate maximum water surface depth without tail water (y_2) using the above Equation 10.4.3.3.5 which is for $W_B = 2W_o$. Set the end sill height, h_3, between $0.06y_2$ and $0.1y_2$. If the above dimensions are compatible with the topography at the site, the dimensions are final. If not, a different value of L_2/h_2 is selected and the design procedure repeated.

Step 7. Determine the basin exit depth, $y_3 = y_c$ and exit velocity, $V_2 = V_c$. $Q^2/g = (A_c)^3/T_c = [y_c(W_B + y_c)]^3/(W_B + 2y_c)$ (substituting for A_c and T_c using the properties of a trapezoid).

$V_c = Q/A_c$

Step 8. Riprap may be necessary downstream especially for the low tail water cases. Two (2) or three (3) foot toe down is a recommended minimum.

10.4.3.4 - USBR Type VI Impact Basin

The U.S. Bureau of Reclamation Type VI impact basin requires no tail water to function. The outflow hits the vertical hanging baffle and provides the necessary energy dissipation.

Figure 10.4.3.4.A - USBR Type VI Impact Basin

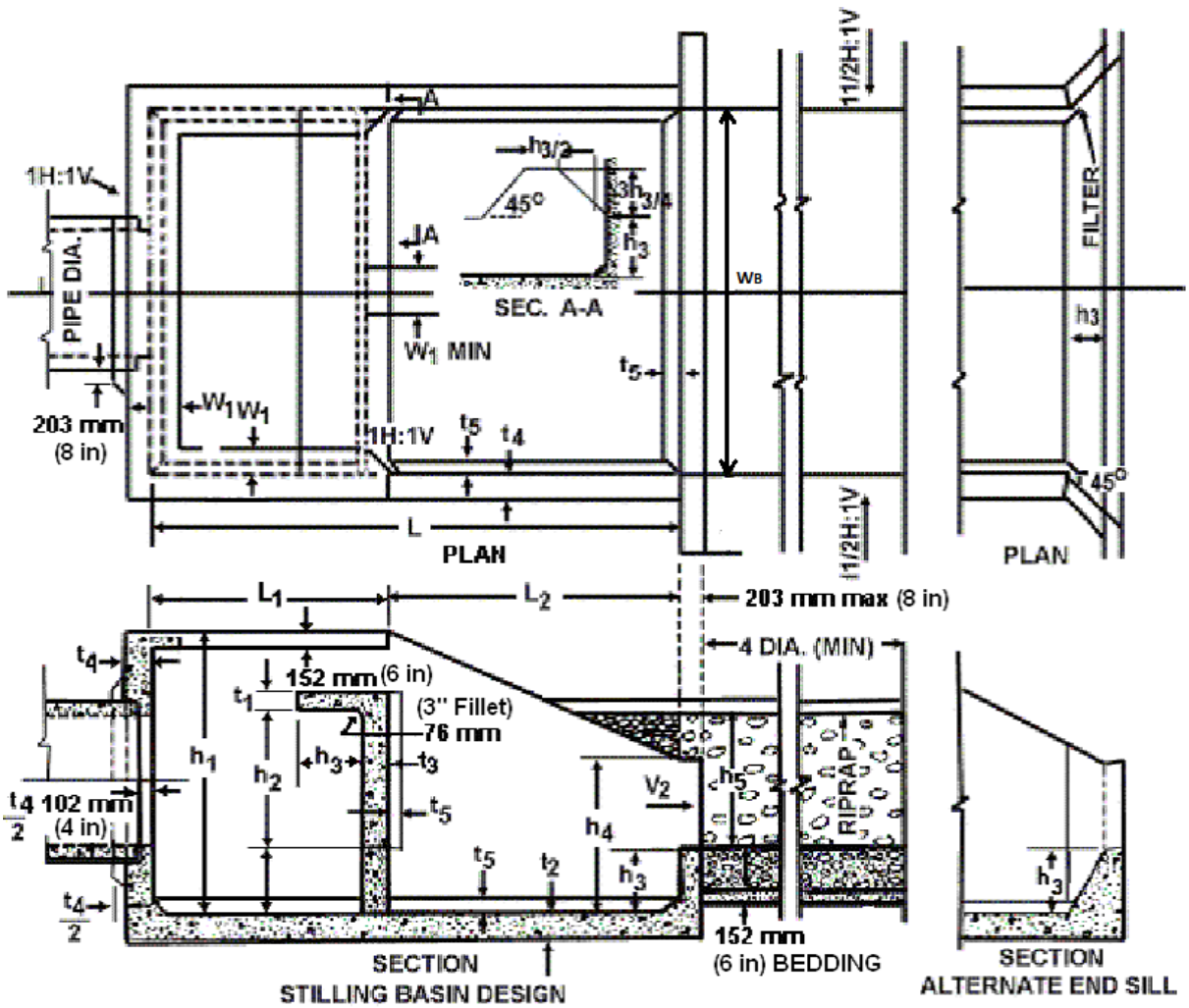

(Source FHWA, Hydraulic Design of Energy Dissipators for Culverts and Channels, 2006)

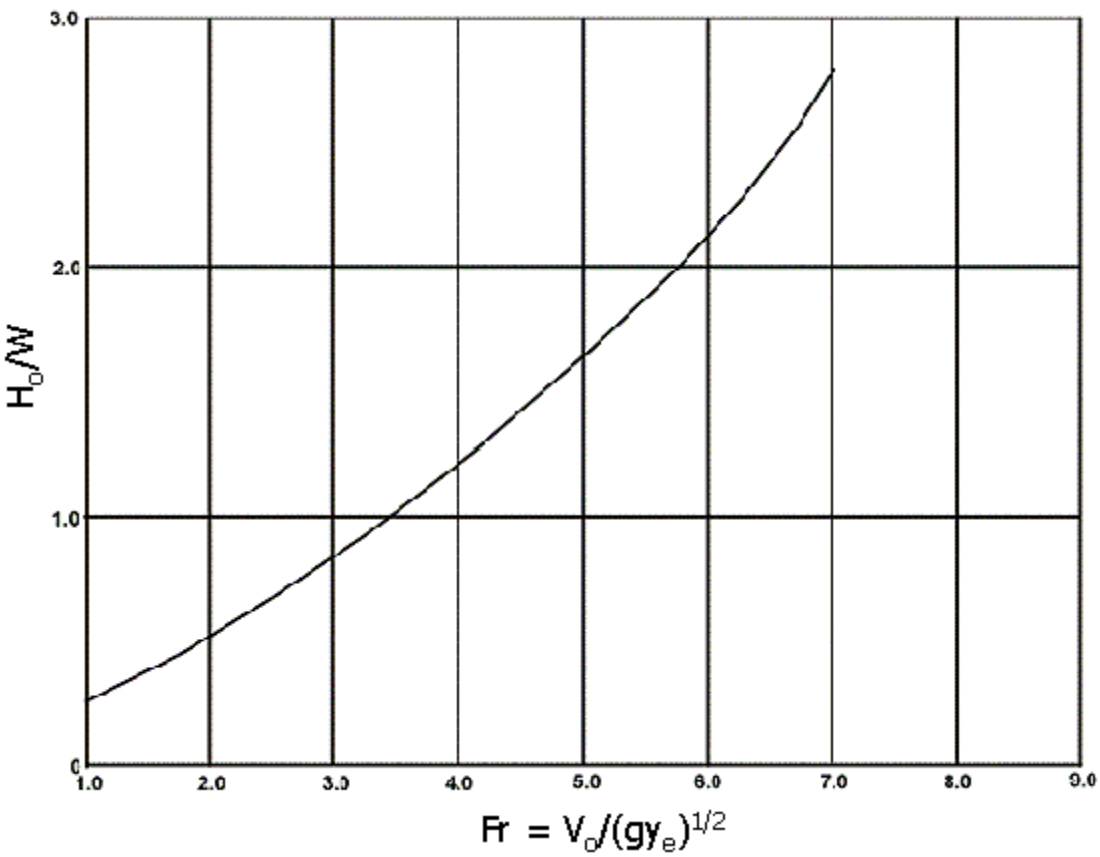

Figure 10.4.3.4.B *- Design Curve for USBR Type VI Impact Basin*
(Source FHWA, Hydraulic Design of Energy Dissipators for Culverts and Channels, 2006)

Table 10.4.3.4. - USBR Type VI Impact Basin Dimensions (ft)
(Source FHWA, Hydraulic Design of Energy Dissipators for Culverts and Channels, 2006)

W_B	h_1	h_2	h_3	h_4	L	L_1	L_2
4	3.08	1.50	0.67	1.67	5.42	2.33	3.08
5	3.83	1.92	0.83	2.08	6.67	2.92	3.83
6	4.58	2.25	1.00	2.50	8.00	3.42	4.58
7	5.42	2.58	1.17	2.92	9.42	4.00	5.42
8	6.17	3.00	1.33	3.33	10.67	4.58	6.17
9	6.92	3.42	1.50	3.75	12.00	5.17	6.92

10	7.58	3.75	1.67	4.17	13.42	5.75	7.58
11	8.42	4.17	1.83	4.58	14.58	6.33	8.42
12	9.17	4.50	2.00	5.00	16.00	6.83	9.17
13	10.17	4.92	2.17	5.42	17.33	7.42	10.17
14	10.75	5.25	2.33	5.83	18.67	8.00	10.75
15	11.50	5.58	2.50	6.25	20.00	8.50	11.50
16	12.25	6.00	2.67	6.67	21.33	9.08	12.25
17	13.00	6.33	2.83	7.08	21.50	9.67	13.00
18	13.75	6.67	3.00	7.50	23.92	10.25	13.75
19	14.58	7.08	3.17	7.92	25.33	10.83	14.58
20	15.33	7.50	3.33	8.33	26.58	11.42	15.33

W_B	W_1	W_2	t_1	t_2	t_3	t_4	t_5
4	0.33	1.08	0.50	0.50	0.50	0.50	0.25
5	0.42	1.42	0.50	0.50	0.50	0.50	0.25
6	0.50	1.67	0.50	0.50	0.50	0.50	0.25
7	0.50	1.92	0.50	0.50	0.50	0.50	0.25
8	0.58	2.17	0.50	0.58	0.58	0.50	0.25
9	0.67	2.50	0.58	0.58	0.67	0.58	0.25
10	0.75	2.75	0.67	0.67	0.75	0.67	0.25

11	0.83	3.00	0.67	0.75	0.75	0.67	0.33
12	0.92	3.00	0.67	0.83	0.83	0.75	0.33
13	1.00	3.00	0.67	0.92	0.83	0.83	0.33
14	1.08	3.00	0.67	1.00	0.92	0.92	0.42
15	1.17	3.00	0.67	1.00	1.00	1.00	0.42
16	1.25	3.00	0.75	1.00	1.00	1.00	0.50
17	1.33	3.00	0.75	1.08	1.00	1.00	0.50
18	1.33	3.00	0.75	1.08	1.08	1.08	0.58
19	1.42	3.00	0.83	1.17	1.08	1.08	0.58
20	1.50	3.00	0.83	1.17	1.17	1.17	0.67

The recommended design procedure for the USBR Type VI impact basin is as follows:

Step 1. Determine the maximum discharge (Q (cfs)) and velocity (V_o (ft./s) and check against design limits. Calculate the flow area at the end of the approach pipe, A (ft^2). Calculate equivalent depth, $y_e = (A/2)^{1/2}$ (ft).

$$A = Q/V_o$$

$$y_e = (A/2)^{1/2}$$

Step 2. Calculate the Froude number (Fr) and the energy at the end of the pipe (H_o (ft)).

$$Fr = V_o / (gy_e)^{1/2}$$

$$H_o = y_e + V_o^2/(2g)$$

Step 3. Determine H_o/W_B from Figure 10.4.3.4.B. Calculate the required width of basin (W_B (ft)). $W_B = H_o / (H_o / W_B)$

Step 4. Obtain the remaining dimensions of the USBR Type VI impact basin from Table 10.4.3.4 using W_B obtained from Step 3.

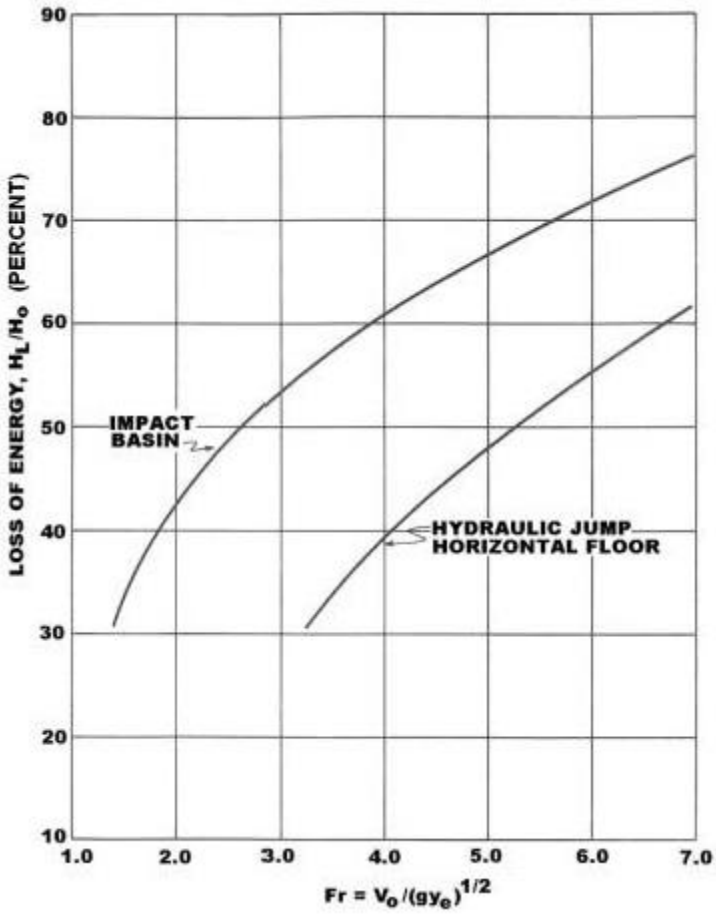

Figure 10.4.3.4.C - Energy Loss of USBR Type VI Impact Basin versus Hydraulic Jump
(Source FHWA, Hydraulic Design of Energy Dissipators for Culverts and Channels, 2006)

Step 5. Determine exit velocity, $V_B = V_2$, by trial and error using an energy balance between the culvert exit and the basin exit. Determine if this velocity is acceptable and whether or not riprap protection is needed downstream. Use Figure 10.1.3.4.C to determine H_L/H_o percent by using the calculated Fr from Step 2.

$H_B = Q/(W_B V_B) + V_B^{2/}/(2g) = H_o(1- H_L/H_o)$

This equation is a cubic equation yielding three (3) solutions, two (2) positive and one (1) negative. The negative solution is discarded. The two positive roots yield a subcritical and supercritical solution. Where low or no tail water exists, the supercritical solution is taken. Where sufficient tail water exists, the subcritical solution is taken.

10.4.3.5 - Baffle Blocks

Baffle blocks should be used to reduce the subcritical velocity to six (6) feet per second or less. A minimum of two (2) rows of block should be used. The distance from the culvert to the first row of blocks should be a minimum of the culvert height. The height of blocks should be a minimum of one (1) foot or critical depth (d_c). The width of the block and spacing of blocks should match the height of block. The second row of blocks should be offset so the block lines up with the spacing of the first row of blocks. The blocks should extend across the total bottom width of the culvert outlet structure.

10.5 - Special Applications - Detours

10.5.1 - Detour Culverts

A detour route may be required during the reconstruction of an existing roadway. The detour route is a temporary relocation of the road during construction. If an existing roadway has a culvert crossing to be reconstructed, the detour roadway culverts should have the same conveyance as the existing crossing as a minimum. The design should also consider soil protection of the embankment to prevent erosion around the culverts and the temporary roadway.

10.5.2 - Risk

The detour stream crossing is usually design to a lower frequency storm. The design engineer should consider a number of risk factors for the hydraulic design of the culverts. The risk factors to be considered during the design should include the probability of flooding during the use of the detour, the risk to life and property from backwater and washouts, traffic requirements, school bus routes, and emergency routes.

The following equation relates the probability of occurrence to the flood event.

(Equation 10.5.2)

$$R = 1 - (1 - AEP)^{n}$$

R = Risk - probability of occurrence
AEP = Annual Exceedance Probability of the flood event
n = length of time required for the detour (year)

The above equation generated the curves in Figure 10.5.2. The figure represents the risk versus flood event. As an example, if you were to design the detour culverts for a five (5)-year storm (20% AEP) and the project construction length was one (1)-year, the odds are four to one (4:1) against the occurrence, or twenty percent (20%) risk. If you design the detour culverts for a ten (10)-year storm (10% AEP) with the same project length, then the odds are nine to one (9:1) against the occurrence or ten percent (10% risk). Designing to a higher frequency storm will lower the risk of flood occurrence.

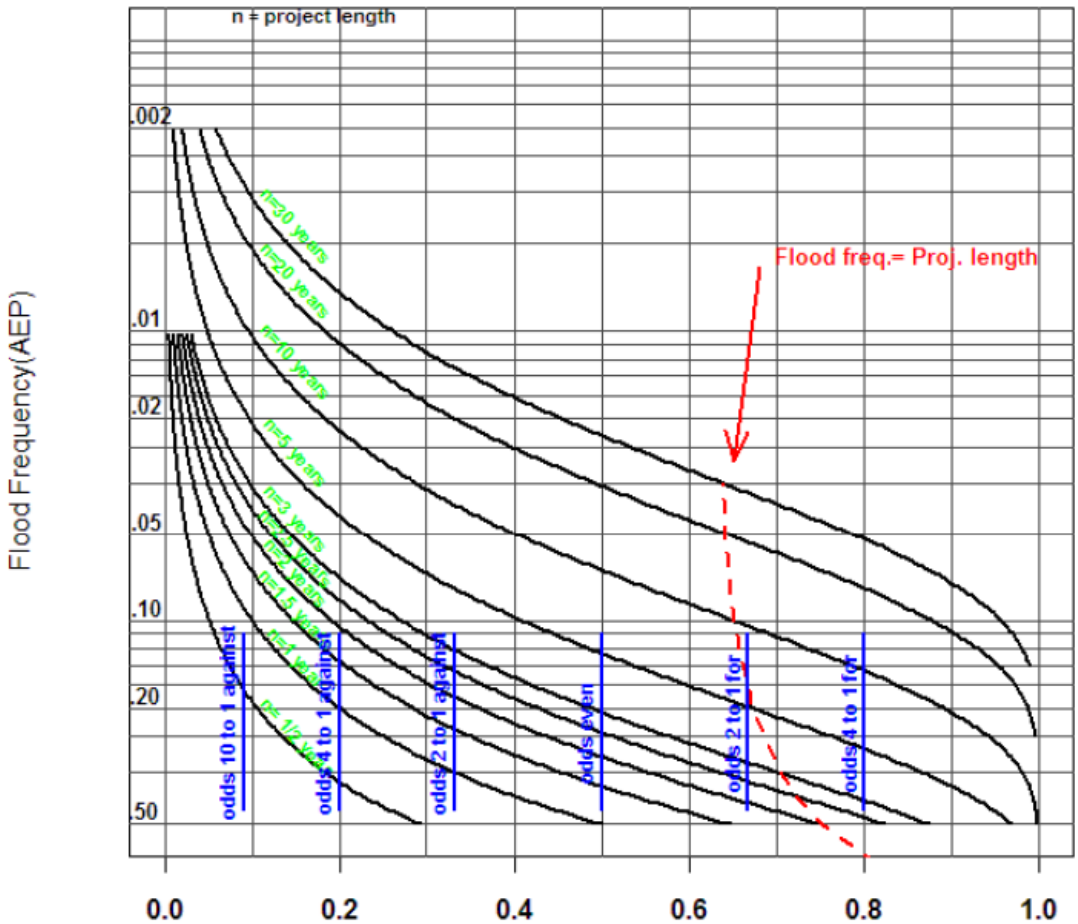

Figure 10.5.2 *- Flood Frequency vs. Risk*
(Source TxDOT, Hydraulic Design Manual, 2011)

10.5.3 - Engineering Requirements

Should a detour road be required for a project and the detour crosses over a low requiring a culvert, the licensed engineer should design the detour road culverts.

10.6 - References

10.6.1 - Reference Citations

A. TXDOT. Culverts. Chapter 8 in *Hydraulic Design Manual* . Texas Department of Transportation, Revised 2011. (Accessed April 2014)

B. FHWA. *Hydraulic Design of Energy Dissipators for Culverts and Channels* . Hydraulic Engineering Circular No. 14. 3rd edition. FHWA-NHI-06-086. Federal Highway Administration, Department of Transportation, Washington, DC, July 2006.

10.6.2 - References

• TXDOT. Culverts. Chapter 8 in *Hydraulic Design Manual* . Texas Department of Transportation, Revised 2011. (Accessed April 2014)

• FHWA. *Hydraulic Design of Energy Dissipators for Culverts and Channels* . Hydraulic Engineering Circular No. 14. 3rd edition. FHWA-NHI-06-086. Federal Highway Administration, Department of Transportation, Washington, DC, July 2006.

CHAPTER 11 - BRIDGES

11.1 - Introduction

The function of a bridge is similar to a culvert, in that it is to convey surface water under a highway, railroad, or other embankment. This chapter describes the hydraulic aspects of bridge design, construction and operation of bridges, and makes references to structural aspects only as they are related to the hydraulic design. The hydraulic design must consider channel and abutment scour at different bridge components. Also impact from floating debris must be considered for the structural design of the bridge components.

Where proposed streets cross existing or proposed watercourses, all-weather crossings shall be required. Bridges shall be adequate to allow passage of the design storm identified in Section 11.3.1 of this chapter.

11.2 - Hydraulics of Bridges

The design engineer will analyze both existing and proposed bridges. The HEC-RAS model is recommended to analyze a bridge. Other models may be used with the approval of the Director of TCI.

A proposed bridge may increase the depth of flow upstream of the encroachment. Modifications of the channel downstream and upstream of the proposed bridge may be needed to reduce the upstream impact. A drainage easement, meeting the requirements of Chapter 15, should encompass any channel improvement needed for the bridge and increase in water surface.

Section 1 should be located downstream of the bridge at a point where the expansion of flow from the bridge is expected to occur. Section 2 should be located a short distance downstream of the bridge. Section 3 should be located a short distance upstream of the bridge. Ineffective flow areas should be placed on section 2 and 3 to represent the roadway embankment. Section 4 should be located upstream of the bridge at a point where the start of contraction is expected to occur.

Typical contraction and expansion values at bridge sections is 0.3 and 0.5 respectively. Abrupt transitions will have higher values. The contraction and expansion values should be used on Sections 2, 3, and 4.

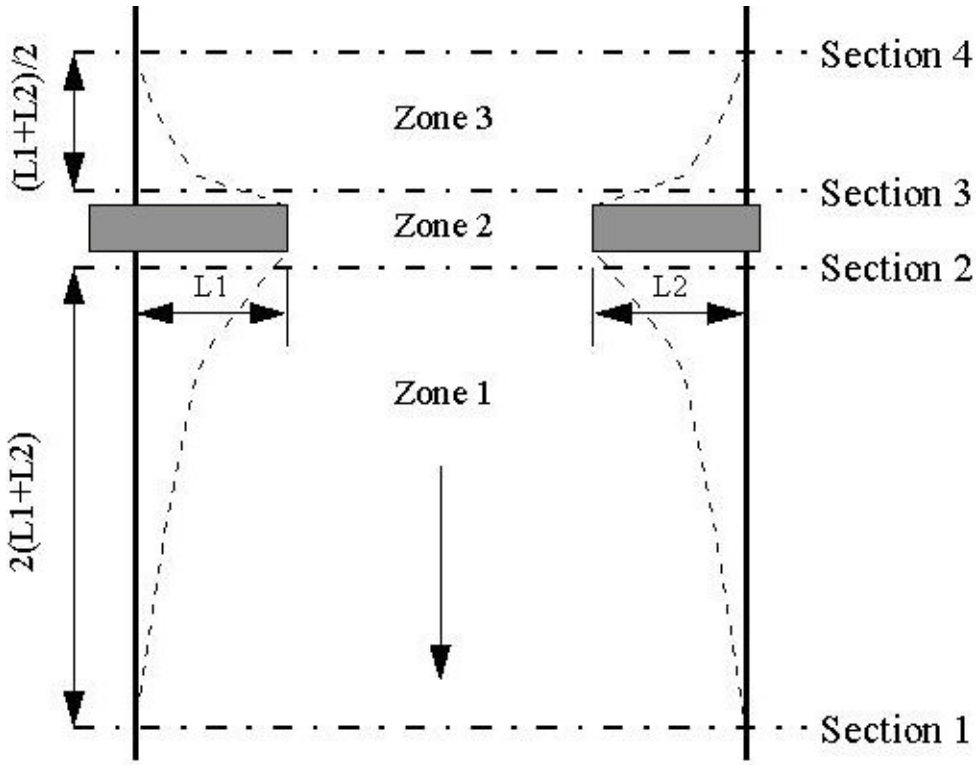

Figure 11.2 - Cross Section Locations at Bridge or Culvert
(Source TxDOT Hydraulic Design Manual)

11.2.1 - Low Flow

There are three (3) classes of flow for low flow conditions. Low flow exists when the water surface is below the low chord of the bridge opening. See Figure 11.2.1.

Class A low flow exists when the water surface is subcritical from Sections 1 to 4.

There are four (4) methods available between sections 2 and 3. These methods are energy equation, momentum balance, Yarnell equation, and FHWA WSPRO method.

Class B low flow exists when the water surface passes through critical depth within the bridge constriction between section 2 and 3. The flow upstream and downstream of the bridge can be either subcritical or supercritical.

Class C low flow exists when the water surface is supercritical from section 1 to 4.

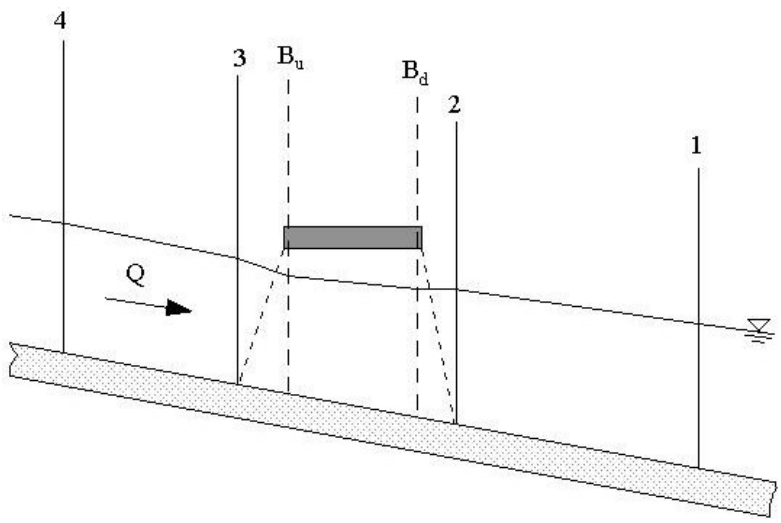

Figure 11.2.1 - Bridge Profile with Cross Section Location
(Source TxDOT Hydraulic Design Manual)

11.2.2 - High Flow

High flow exists when the water surface comes into contact with the maximum low chord of the bridge opening. The computation would be by the Energy equation or by hydraulic equations for pressure and or weir flow.

11.2.2.1 - Energy Equation

This method is based on balancing the energy equation in three (3) steps through the bridge. These steps are energy losses based on the friction losses along the channel, contraction losses on the upstream side of the bridge, and expansion losses on the downstream side of the bridge.

11.2.2.2 - Pressure and Weir Flow

Pressure flow occurs when the upstream water surface comes in contact with the low cord of the bridge and a backwater conditions occur. If the downstream side of the bridge low cord is not in contact with the bridge, then a sluice gate type of equation is used (FHWA, 1978). See Figure and Equation 11.2.2.2A on the following page.

(Equation 11.2.2.2A)

$$Q = CA_b\left[2g\left(y_3 - \frac{D_b}{2} + \alpha_3\frac{v_3^2}{2g}\right)\right]^{0.5}$$

Q = Total discharge through the bridge opening (ft. ^{3}/s)
C = Coefficients of discharge for pressure flow
A_b = Net area of the bridge opening at section BU (ft. ^{2})
y_3 = Hydraulic depth at section 3
D_b = Vertical distance from maximum bridge low chord to the mean river bed elevation at section BU (ft.)
g = Gravitational acceleration (32.2 ft./s ^{2})
α_3 = kinetic energy correction coefficient (FHWA HDS-1 1978)
v_3 = Velocity upstream at section 3

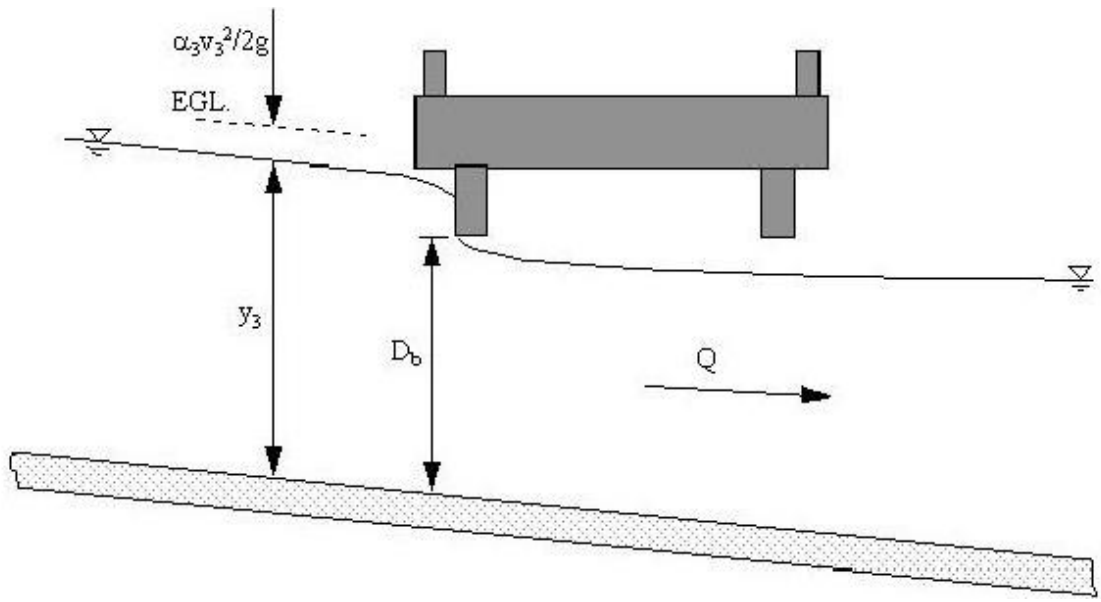

Figure 11.2.2.2.A - Sluice Gate Type Pressure Flow
(Source TxDOT Hydraulic Design Manual)

The orifice equation will be used if both up and downstream of the bridge are submerged. See Figure 11.2.2.2B on the following page.

(Equation 11.2.2.2B)

$$Q=CA(2gH)^{0.5}$$

C = Coefficient of discharge for fully submerged pressure flow. Typical value of C is 0.8
H = The difference between the energy gradient elevation upstream and the water surface elevation downstream (ft.)
A = Net area of the bridge opening (ft^2)

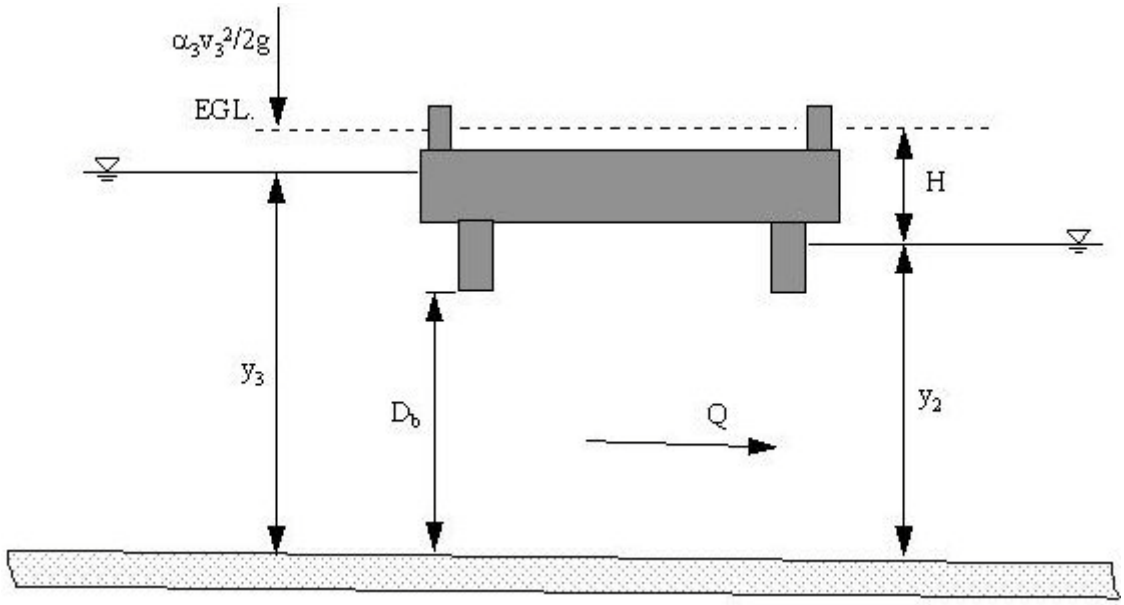

Figure 11.2.2.2.B - Orifice Type Pressure Flow
(Source TxDOT Hydraulic Design Manual)

Should flow be over the bridge and the roadway approaching the bridge, then the standard weir equation is used to calculate flow. See Figure 11.2.2.2.C.

(Equation 11.2.2.2C)

$$Q=CLH^{3/2}$$

Q = Total flow over the weir (ft. ^{3}/s)
C = Coefficients of discharge for weir flow
L = Effective length of the weir (ft.)
H = Difference between energy upstream and road crest (ft.)

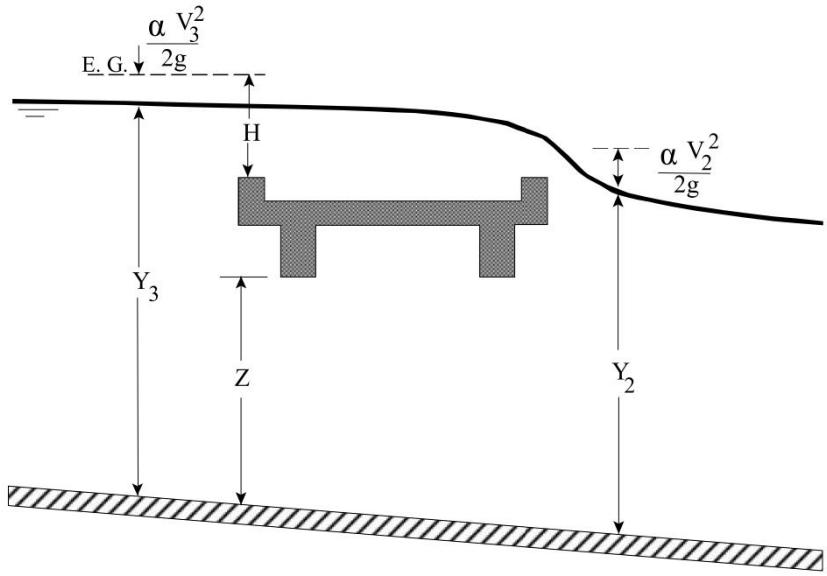

Figure 11.2.2.2.C - Pressure and Weir Flow
(Source USACE HEC-RAS Reference Manual)

For more information regarding hydraulic computations, refer to USACE HEC-RAS Reference Manual.

11.3 - Design Guidelines

11.3.1 - Design Frequency

The design frequency for bridges is the ultimate twenty-five (25) year storm for upstream drainage area less than one hundred (100) acres with a freeboard based on section 11.3.2 or the ultimate one hundred (100) year storm for upstream drainage area greater than one hundred (100) acres.

11.3.2 - Freeboard

Freeboard at a bridge is the vertical distance between the design water surface elevation and the low-chord of the bridge. The bridge low-chord is the lowest portion of the bridge deck superstructure. The purpose of freeboard is to provide room for the passage of floating debris, extra area for conveyance in the event that debris build-up on the piers reduces hydraulic capacity of the bridge, and a factor of safety against the occurrence of waves or floods larger than the design flood. The minimum freeboard is one (1) foot for the ultimate one hundred (100) year storm. For drainage areas less than one hundred (100) acres, the ultimate twenty-five (25) year storm freeboard will range from 6" to 1 ft depending on channel depth please refer to Table 9.3.14.

11.3.3 - Supercritical Flow

For supercritical flow conditions in a stream or channel, the design engineer should confirm that the bridge opening is clear of bridge piers or other projections and does not impact the flow. If bridge piers or other projections are within the bridge opening, then hydraulic jumps within the bridge structure should be considered and the impacts should be included in the bridge design.

11.3.4 - Scour

Consideration of the scour of soil around a bridge from a storm event(s) is critical to the longevity of the structure. The total scour at a bridge crossing is comprised of three (3) components. These are long term

aggradations and degradation, contraction scour, and local scour at piers and abutments. The long term aggradations and degradation should be checked to determine the additional stream bed losses that may impact the bridge scour analysis.

Bridge scour analysis for contraction scour and local scour at piers and abutments must be performed using the HEC-RAS model or other modeling that has been approved by the Director of TCI. Scour analysis will not be needed if the channel is concrete lined.

For slope protection at abutments should be checked, after performing the scour analysis, for slope stability and sliding of the slope protection. The slope protection could impact the stability of the bridge.

11.3.5 - Minimum Clear Height

The design engineer should consider the minimum clear height from the channel bottom to the bottom of the bridge beams to be six (6) feet. Additional height should be considered for passage of maintenance vehicles under the bridge to minimize the number of channel access ramps.

11.3.6 - Bridge Deck Drains

Bridge deck drains should achieve the following:

- Minimize the spread of water into the traffic lanes
- Prevent the accumulation of significant depth of water to reduce hydroplaning
- Integration of the drain into the structural deck
- Reduce drain hazards to bicyclists
- Maintenance of the deck drains
- Provide sufficient longitudinal grade
- Avoid zero longitudinal grade and sag vertical curves on the bridge
- Intercept all flow from curbed street before it reaches bridge

11.3.6.1 - Constant Grade Bridges

The following calculations are for determining possible inlet spacing on a constant grade bridge. If the slope is less than 0.003 ft./ft., a check should be performed using the calculations for flat bridges. Calculations start from the high end and work down slope. The rest of the bridge specifications are assumed to be known.

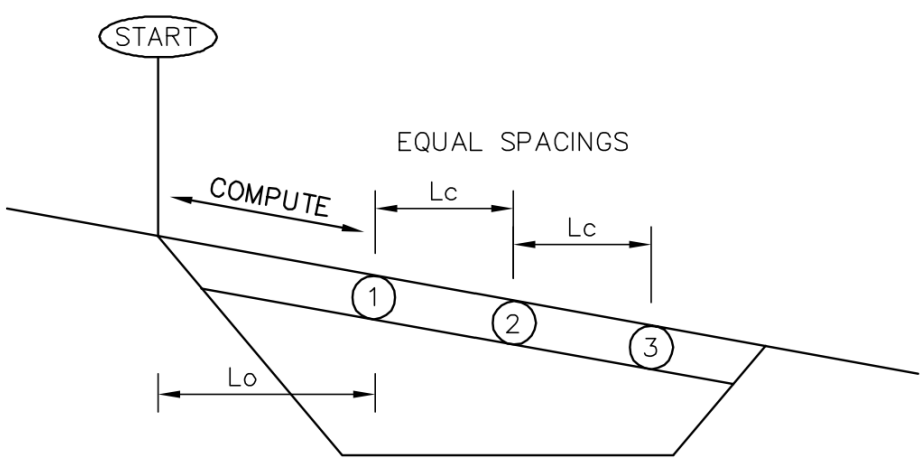

Figure 11.3.6.A Constant Grade Bridge

Flow for initial inlet:

(Equation 11.3.6.1A)

$$L_0 = \frac{43560Q}{CiW_p}$$

i = Design rainfall intensity (in./hr.)
Q = Gutter flow (ft. ^{3}/s)
L_0 = Distance to first inlet (ft.)
C = Rational runoff coefficient (usually 0.9 from imperfections in pavement)
W_p = Width of pavement contributing to gutter flow (ft.)

Flow for subsequent inlets:

(Equation 11.3.6.1B)

$$L_c = \frac{43560QE}{CiW_p}$$

L_c = Constant distance between inlets (ft.)
E = Capture efficiency for proposed inlets, which can be found in manufacturers' literature.

If L_0 is greater than the length of the bridge, only end treatment drainage is needed. Caution is needed, as the discharge point for the inlets must be considered in the placement as well. The discharge should not be onto structural elements, over traveled ways, or unprotected ground that has a possibility of erosion.

11.3.6.2 - Flat Bridges

The following calculations are for determining possible inlet spacing on flat bridges. Flat bridges are generally discouraged in order to prevent ponding on the bridge surface.

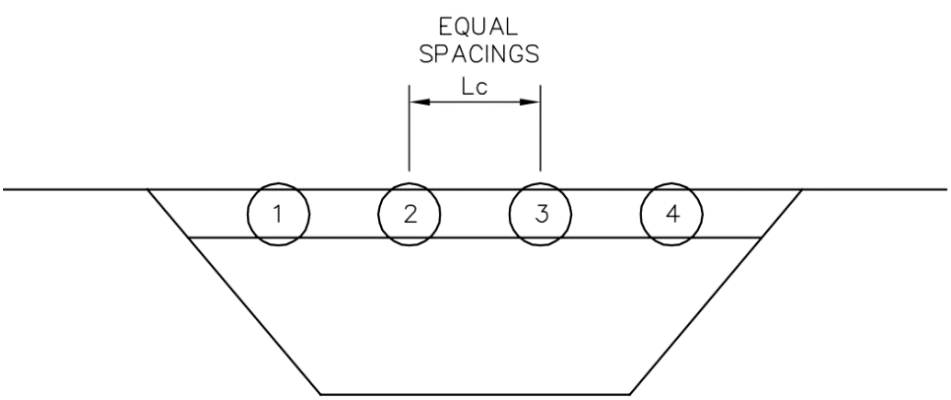

Figure 11.3.6.B - Horizontal Bridge

(Equation 11.3.6.2A)

$$L_c = \frac{1312}{(nCiW_p)^{0.67}} S_x^{1.44} T^{2.11}$$

i = Design rainfall intensity (in./hr.)
L_c = Constant inlet spacing (ft.)
C = Rational runoff coefficient (usually 0.9 from imperfections in pavement)
W_p = Width of pavement contributing to gutter flow (ft.)

n = Manning's N
S_x = Gutter cross-slope (ft.)
T = Design spread (width of gutter flow) (ft.)

If L_c is greater than the length of the bridge, only end treatment drainage is needed. If L_c is less than the bridge length, then compute the total needed inlet perimeter as follows:

(Equation 11.3.2B)

$$P = \frac{(CiW_p)^{0.33} T^{0.61}}{102.5 S_x^{0.06} n^{0.67}}$$

11.3.7 - Roadway Overtopping

Avoid overtopping of the bridge deck from a design storm. If overtopping of the bridge is possible, the design engineer should check the bridge for floatation and provide proper anchorage of the deck and super structure components.

11.3.8 - Bridge Railing

The bridge railing should be traffic rated.

If overtopping of the bridge from a design storm is possible, the bridge railing should be design to minimize obstruction to the storm overtopping.

Should a bridge railing be on the exterior of the bridge with a sidewalk adjacent to the railing, a hand rail may be needed on top of the bridge railing.

11.3.9 - Structural Loads

All roadway crossings, culverts, and bridges shall be designed for an H-20-44 or HS-20 loading.

All train crossings, culverts and bridges should be designed for a minimum of E80 or as designated by the railroad.

11.3.9.1 - Deck

The bridge deck may need to be checked for uplift forces from floatation or from hydraulic jumps in supercritical flow through the bridge.

11.3.9.2 - Piers/Columns

The bridge columns should be design for force of the water on the bridge structure and additional impact loading from debris on both the columns and deck.

11.4 - References

11.4.1 - Reference Citation

1) City of El Paso Engineering Department. *Drainage Design Manual* . City of El Paso, El Paso, Texas, June 2008, page 181.

11.4.2 - References

• FHWA. *Evaluating Scour at Bridges* , 4th edition. Hydraulic Engineering Circular No. 18, FHWA-NHI-01-001. Federal Highway Administration, U.S. Department of Transportation, Washington, DC, May 2001.

• USACE. *HEC-6 - Scour and Deposition in Rivers and Reservoirs - User's Manual* . U.S. Army Corp of Engineers, Hydrologic Engineering Center, Davis, California, 1991.

• TXDOT. Bridges. Chapter 9 in *Hydraulic Design Manual* . Texas Department of Transportation, Revised May 2014. Retrieved from http://onlinemanuals.txdot.gov/txdotmanuals/hyd/index.htm

• FHWA. *Design of Bridge Deck Drainage* . Hydraulic Engineering Circular No. 21, FHWA-SA-92-010, Federal Highway Administration, U.S. Department of Transportation, Washington, DC, 1993.

• USACE. *HEC-RAS River Analysis System - Hydraulic Reference Manual Version 4.1* . U.S. Army Corp of Engineers, Hydrologic Engineering Center, Davis, California, Jan. 2010.

• FHWA. *Hydraulics of Bridge Waterways* . Hydraulic Design Series No. 1. Federal Highway Administration, U.S. Department of Transportation, Washington, DC, March 1978.

CHAPTER 12 - PUMP STATIONS

12.1 - Introduction

This chapter describes the general guidelines for the design of a pump station.

Pumped detention systems will not be acceptable methods of storm water mitigation unless the facility will remain privately owned, operated, and maintained. The City of San Antonio will approve the use of a pumped facility for private use under the following conditions:

Condition 1: A gravity system is not feasible from an engineering and economic standpoint.

Condition 2: At least two (2) pumps are provided, each of which are sized to pump the design flow rate.

Condition 3: The selected design outflow rate must not aggravate downstream flooding.

Condition 4: Controls and pumps are designed to prevent unauthorized operation and vandalism.

Condition 5: Adequate verification is provided that the system will be operated and maintained on a continuous basis.

12.1.1 - Purpose of a Pump Station

The purpose of a pump station is to lift storm water runoff from a wet well to a receiving stream or outfall. The pump station should be the considered the least desirable method for movement of storm water. The gravity system should be the primary and preferred means of discharging flow from a storm drain system. A pump station may also be used in a water quality basin to discharge treated water into a receiving stream.

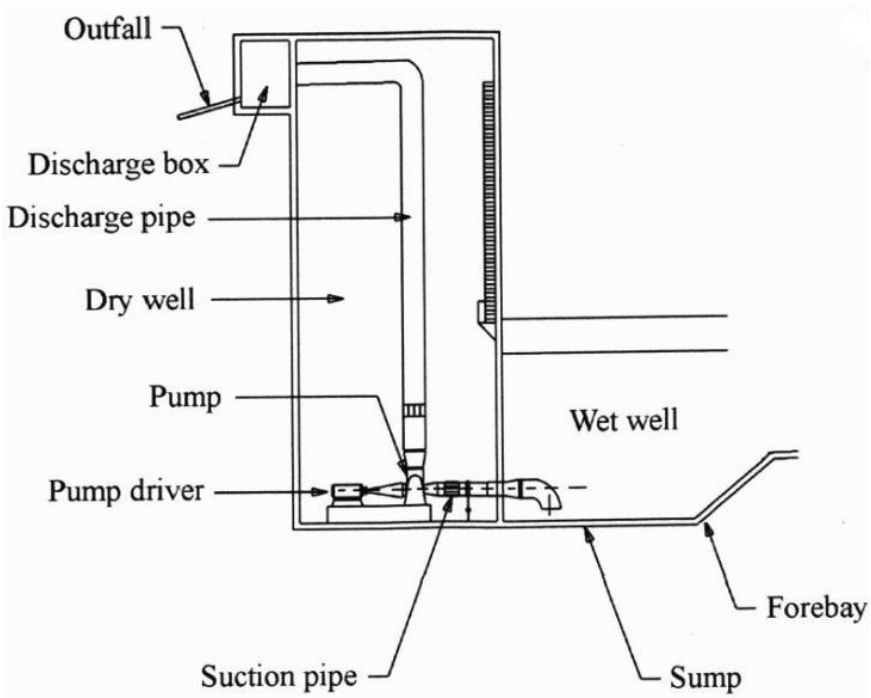

Figure 12.1.1.A - Sump Area with Drywell

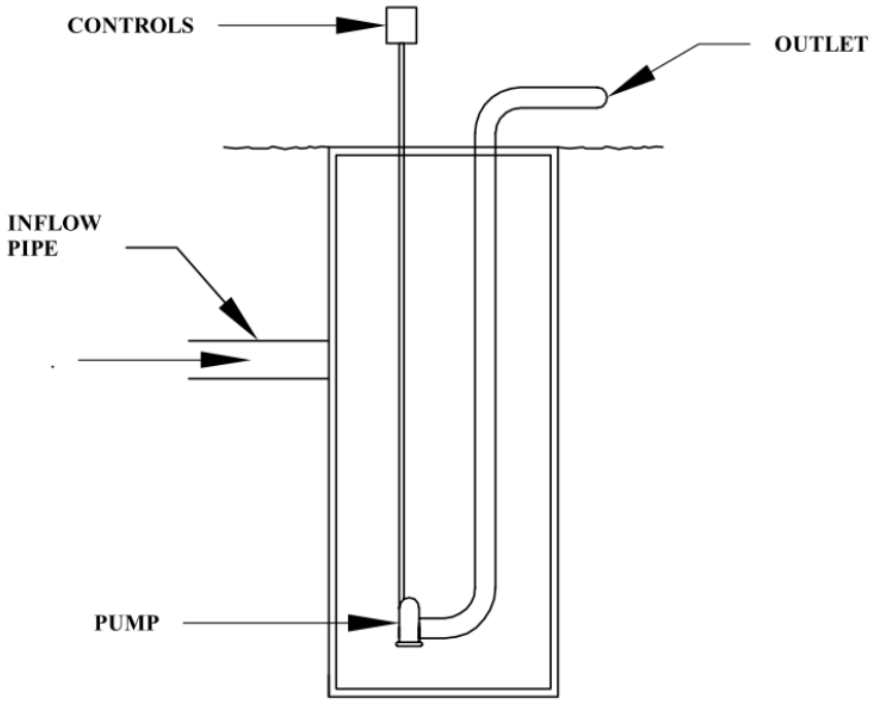

Figure 12.1.1.B - Wet Well

During the pump station planning the design engineer should contact manufacturer representatives for pumps and generators if needed for the site. Contractors who have experience in pump station construction are a good source of information.

12.1.2 - Security and Access Considerations

12.1.2.1 - Security

The pump station or pump wet well should be protected with fences, gates, and locks to prevent illegal entry.

12.1.2.2 - Access

Adequate access must be provided to the pump station or pump wet well. This access should be available for service and maintenance vehicles during a storm event. See Chapter 16.4 Pump Stations for drainage easement requirements.

12.1.3 - Safety and Environmental Considerations

12.1.3.1 - Safety

Standard OSHA rules and other industrial standards of safety should be followed for installation as well as maintenance of a pump station. Access, lighting, ventilation and traffic control should be considered for all instances dealing with a pump station.

12.1.3.2 - Hazardous Spills

Hazardous spills should be handled appropriately according to known safety standards for a spill of that type. Personnel should be able to have access to appropriate materials to contain and/or clean all spills.

12.2 - Pump Station Components

12.2.1 - Overview of Components

A full discussion of the design and specifications of a pump station can be had with the use of a common reference for designing pump stations, FHWA Hydraulic Engineering Circular number 24 (HEC-24). Appropriate specialists for the different components should be consulted early in the design process. The following are various necessary components that the design engineer should pay particular attention to.

Property: An entire pump station generally requires more footprint than merely the pumps and wet well or sump. Other necessary parts of the station include the electrical service, system controller, motor control center cabinets - which must be in a separate, dry room - and standby power generation. Other considerations may be on-site storage and parking. A required consideration is maintenance access to the pumps and the standby generator; not just personnel access, but the ability and room to bring in suitable vehicles and equipment such as a boom crane to lift out pumps, generator, and electrical cabinets for repair or replacement.

- **Arrangement:** The wells and pumps may not need to be in the same place as the control house. An example of this is a set of wells with submerged pumps and discharge conduits located in a wide median of a depressed section of interstate highway. The control house with the electrical service, standby generator, motor control center, and control circuitry is located along the frontage road out of the depressed section and away from buried or overhead utilities.

- **Wet Well:** The wet well receives the inflow of storm water prior to pumping. It must also be designed with a trash collection rack, room for sedimentation collection without diminishing the design capacity, and sump pump to remove the bottom storage below the main pump level.

- **Electrical:** The appropriate electrical service for a pump station is usually 277/480-volt, three (3-)phase AC. For a typical pump station, the electrical service equipment includes large metal cabinets for the electrical metering, main circuit breaker, a transfer switch to isolate the station from the utility when the standby generator is powering the station, and the electrical distribution panel. The details of the electrical service equipment are the province of the electrical engineer. However, the design engineer must understand that clearances and air space around electrical equipment are not options; they are mandatory safety requirements which may increase the footprint of the pump station, but cannot be ignored.

- **Standby Power:** The normal source of standby power is either a diesel or natural gas engine/generator set. Fuel cells are not suitable for pump stations because of the hours long start-up time they require. Battery technology is improving to the point where solar or wind power may become viable. Natural gas over diesel is preferred, as sitting diesel can possible gel, become contaminated by moisture over the time period of non-use, as well as have interrupted delivery during critical moments.

- **Pumps:** Pump selection depends on station layout, required pump rate, wet well depth, and pump maintenance considerations. Pump selection includes the size, type, and number of pumps. Pump sizes are usually selected to use multiple pumps rather than a single pump of appropriate size. Smaller pumps are usually less expensive to buy and operate, and with multiple pumps the loss of one will not shut down the entire pump station. A single, large pump is more likely to have long term maintenance problems from the frequent start up required to handle flows from smaller events. The sump pump is a much smaller pump, usually designed to handle small amounts of trash or debris loading without failing.

- **Motors:** Pump motors for department pump stations are usually 480-volt, three-phase electric motors. However, the specific voltage selected depends on the power available from the utility and on what pump-motor combinations are commercially available. The size of each motor depends on the pump size, flow rate, pressure head, and duty cycle. The hydraulic engineer specifying the pumps must work together with the electrical engineer specifying the motors and the control system to insure compatibility of components.

- **Control and Communication Systems:** The control system for a pump station is more than the sensor and circuitry to activate the pumps when the water in the wet well reaches a predetermined height. The control system includes a large cabinet for the motor control center (MCC) to operate and protect all the motors in the station, separate cabinets for the variable frequency drives (VFD) for the pump motors or any motor that may be expected to operate at less than full speed, and a separate cabinet for the programmable logic controller (PLC). The PLC monitors all signals and controls the sequence of operations of the pumps, activation of the standby generator when necessary, deactivation when the flood event has passed, and operation of any night security lighting. The PLC may also include automatic communication with the District and/or Maintenance Office to report the station's status regarding water levels, pump readiness, utility electrical power status, standby generator battery status, fuel status, security, and other concerns. The PLC can be integrated with the Intelligent Transportation System (ITS) to warn motorists of water over the roadway in the event of extreme rain events that exceed the capacity of the pump station. The design of the controls and communications is also the province

of the electrical designer. However, the design is dependent on the input information from the hydraulic designer such as wet well capacity, allowed pump discharge rate, desired pump discharge rate, and specific communications.

- **Control Board:** The pump station should have a central control board for starting or stopping some processes and verifying the various components' conditions, whether "running", "standby", or "off". In addition, although the station may be operated by a control system (PLC or other), a manual override for each component is highly recommended for maintenance and testing. This must be designed by the electrical engineer with input from maintenance personnel.

- **Structures:** The structure must meet requirements for public safety, safety codes, local extreme weather conditions, site security, and maintenance operations. Maintenance requirements may be oversized doors to move equipment in and out or a movable roof to allow crane access. Aesthetics and the possibility of future expansion should also be considered.

- **Discharge Conduits:** The collected waters are usually discharge to a storm drain system, although sometimes the discharge point is a wetland, mud flat, or creek. The designer must also consider whether the receiving location is suitable for the anticipated pump rate, whether it is available during flood events, and whether flood water discharge from the pump station are allowed.

- **Acceptance test:** A full run acceptance test should be performed successfully before the pump station is accepted. A full run test procedure consists of running the pumps at maximum capacity for at least 6 hours and testing the control systems. During this procedure, the standby generator should be used to power the full station for at least 6 hours which will test the pumps and generator at full load. The discharge conduits can be arranged with a diverter or bypass to pour the pumped water back into the wet well to maintain the full run test.

- **Scheduled Maintenance:** Pump stations, unlike other hydraulic structures, require scheduled cleaning and maintenance. The trash rack should be cleaned after each storm, while the wet well sump must be cleaned whenever the sediment reaches a set point. The standby generator must be exercised at least once a month for a minimum of 30-minutes run time. The entire system including pumps should be exercised under full load at the same schedule to assure reliability. The discharge diverter or bypass from the acceptance test should be maintained so that it can be used in the scheduled maintenance monthly test.

12.3 - Pump Station Hydrology

12.3.1 - Methods for Design

In order to design a pump station effectively, the inflow hydrology must be known. The hydrology developed for the associated storm drain system usually will not serve as a firm basis for discharge determination into the pump station. A hydrograph is required because the time component is critical in understanding the inflow which governs the sizing of the wet well. The designer needs to know not only the peak inflow, but the timing and volume. The difference between the input and the output hydrographs is the storage requirements of the pump station wet well. The hydrograph should consider the storage abilities of the storm drain system, which may reduce the required size of the wet well. Governmental

regulations or the physical limitations of the receiving waters determine the output discharge from the pump station.

The design frequency for a pump station will be ultimate twenty-five (25) year storm if the drainage area to the pumps is less than one hundred (100) acres. If the drainage area to the pumps is more than one hundred (100) acres, the system should be designed for the ultimate one hundred (100) year storm.

12.3.2 - Procedure to Determine Mass Inflow

A mass inflow curve represents the cumulative inflow volume with respect to time. In order to determine a mass inflow curve, the hydraulic designer must first develop an inflow hydrograph based on a design storm. The most typical design method is the NRCS Dimensionless Unit Hydrograph and the procedure can be found in the FHWA Hydraulic Engineering Circular 24 (HEC-24).

12.4 - Pump Station Hydraulic Design Guidelines

12.4.1 - Storage Design Guidelines

The storage volume of the wet well should be less than the total volume of the wet well because allowances should be made for a sump and for freeboard. The sump is the volume of the wet well below the required minimum water level, which is the pump cutoff elevation. The wet well must maintain water above the pump inlet to keep the pump from attempting to pump dry or sucking air. The sump must also have room below the pump intake level for sedimentation and heavy trash that wash into the system.

The top of the storage volume determines the maximum water level, the level in the wet well above which the water should not be allowed to exceed. Any freeboard above the maximum water level is not included in the calculated storage volume. Pumping is initiated at or below the maximum water level, and is stopped when the water drops to the minimum water level.

Other spaces outside of the wet well which store storm water before flooding occurs can also be considered part of the available storage volume. These include sumps, pipes, boxes, inlets, manholes, and ditches of the storm drain system. The storm drain system can represent a significant storage capacity.

The pump station schematic shown in figure 12.4.1.A is typical for roadway crossing under a railroad bridge, with the outfall being higher than the low point of the roadway. The typical cross sections shown in figure 12.4.1.B is the drainage system leading to the pump station.

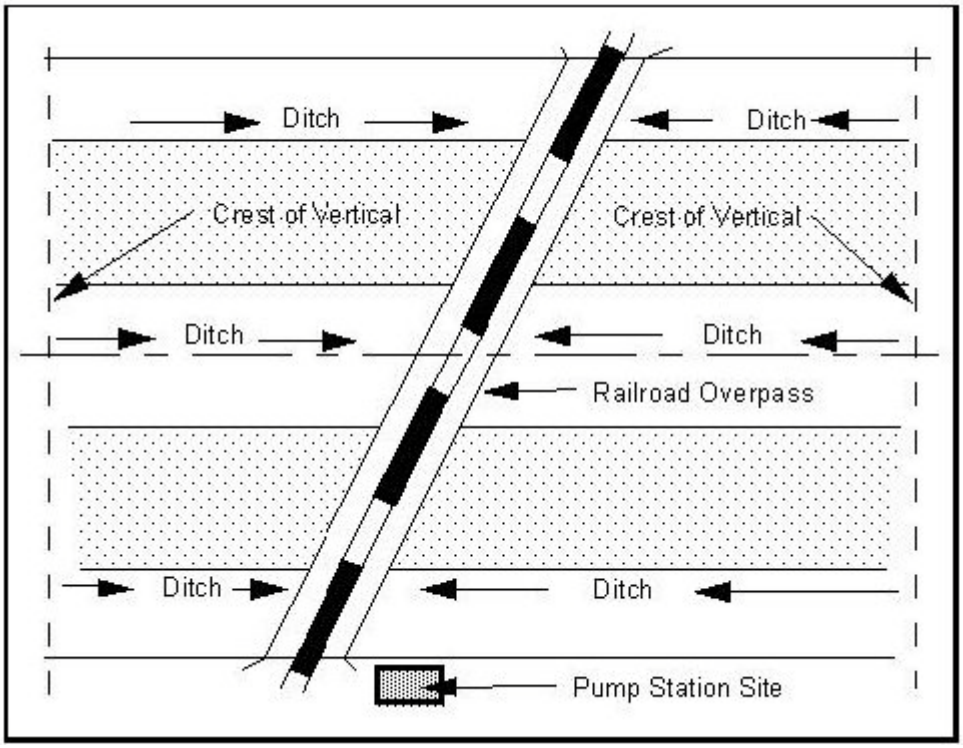

Figure 12.4.1.A - Pump Station Schematic
(Source TxDOT, Hydraulic Design Manual, 2011)

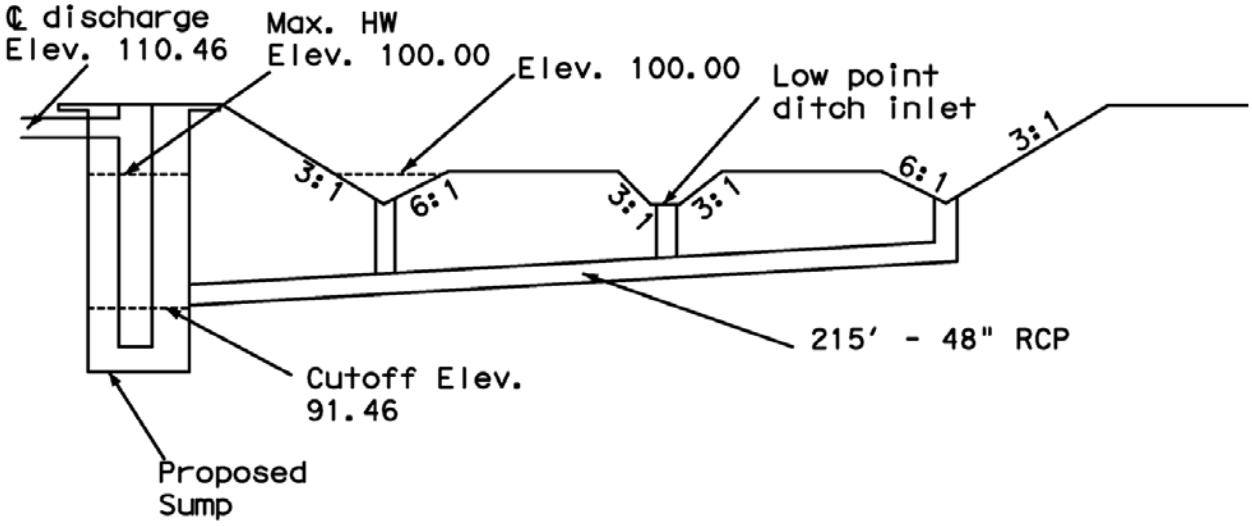

Figure 12.4.1.B - Typical Cross Section
(Source TxDOT, Hydraulic Design Manual, 2011)

12.4.2 - Pump Selection

The selected rate of discharge from the pump station determines the number and size of pumps required for the facility. However, pump selection is a matter of economic analysis by the designer. A decision must be made using several manufacturers' technical data and whether a single or number of pumps would be necessary. A backup pump is required, and will be of the same discharge rating. A slightly lower pump rate than the allowable discharge is fine but the lower rate requires a larger wet well volume.

The designer must also consider the cost of construction and physical restrictions for the wet well. Enlarging the wet well and using fewer pumps might be a reasonable alternative to a larger wet well. In situations where one pump may be able to supply the entire discharge necessary, a minimum of two smaller pumps is recommended for reliability and maintenance. Multiple pumps also offer the opportunity for a staggered startup of pumps. Manufacturer's printed technical data and a sales or technical representative can be invaluable sources at this stage of the design in selecting the right pumps. The final design and pump selection must be based on all the considerations together.

12.5 - Maintenance Considerations

12.5.1 - Operation

During pump station operation, all OSHA and local safety requirements must be adhered to. An entry plan should be developed as part of the operation and maintenance procedures for the pump station. The plan should identify measures to be taken prior to and during any visit to the pump station, including monitoring of environmental conditions, especially air quality.

All semantics, product information, and operational manuals should be provided by the contractor or engineer to the owner upon completion and acceptance of the pump station.

12.5.2 - Maintenance Schedule

An operation and maintenance schedule should identify the frequency of inspection in regards to the need for debris and sediment removal, as the build-up may cause a reduction in pump efficiency and possible failure. A provision should be added for future pump maintenance and/or removal due to failure or reduced durability of the pump due to possible unforeseen circumstances. FHWA Hydraulic Engineering Circular No. 24 (HEC-24) has a general list of problems, causes, and solutions available. A full performance test should be periodically performed to check the continued operating efficiency of the pumping station. See Chapter 4.12 for additional guidance on maintenance standards.

12.6 - References

12.6.1 - Reference Citations

(1) TXDOT. Pump Stations. Chapter 11 in *Hydraulic Design Manual* . Texas Department of Transportation, Revised May 2014. Retrieved from http://onlinemanuals.txdot.gov/txdotmanuals/hyd/index.htm

12.6.2 - References

• TXDOT. Pump Stations. Chapter 11 in *Hydraulic Design Manual* . Texas Department of Transportation, Revised May 2014. Retrieved from http://onlinemanuals.txdot.gov/txdotmanuals/hyd/index.htm

• FHWA. *Highway Storm water Pump Station Design* . Hydraulic Engineering Circular No. 24 FHWA-NHI-01-007, Federal Highway Administration, U.S. Department of Transportation, Washington, DC, 2001.

CHAPTER 13 - STORAGE FACILITIES

13.1 - Introduction

For the City of San Antonio, storm water storage facilities cover many different criteria. Storage facilities are used to reduce flood risk and mitigate peak flows to pre-development conditions so downstream water elevations do not increase. Developers should contact the TCI Department for information on whether the property is within the mandatory detention areas prior to starting a project. For properties not located within the mandatory detention areas, any development with an increase in impervious area greater than one hundred (100) square feet has the options of participating in the Regional Storm Water Management Program (RSWMP) per section 4.3.1B. A water quality feature can be incorporated into a storage basin provided it does not interfere with basin functionality. All storage facilities should be designed with public health and safety in mind.

The following should be considered during the design of the storage facility.

For projects with an increased impervious area of greater than one hundred (100) square feet, that elect not to participate or are not eligible to participate in the regional storm water management program as described in section 4.3 storm water detention shall be required for all new development(s) or redevelopment of individual parcels of property to mitigate peak flow rates to predevelopment or existing development conditions as stated in UDC subsections 4.3.7 and 4.3.8.

Best management practices shall be used in the design of detention facilities in accordance with this Chapter. The timing of the hydrograph released from the detention facility must be checked against the timing of the flow rate in the first open watercourse to prevent increase(s) in the peak flow rate in the receiving watercourse. For detention basins constructed in-line on an existing watercourse, the creation of the basin shall not increase flood elevations in the channel upstream of the new development boundaries.

Where a detention facility accepts flows from public facilities such as City rights-of-way, the facility will be considered as serving a public purpose; it will be dedicated to the City of San Antonio upon completion and a drainage easement will be provided for access to the facility. When a regional detention facility accepts flow from an area exceeding three hundred twenty (320) acres, the facility is to be considered as serving a public purpose and shall be dedicated to the City upon completion and a drainage easement will be provided for access to the facility.

13.1.1 - Security, Access, and Safety Considerations

13.1.1.1 - Security

Due to legal considerations, most storage facilities have gated fencing to keep them in good condition.

13.1.1.2 - Access

Easy maintenance access should be considered with easements and access ramps.

An unobstructed fifteen (15)-foot access easement around the periphery of the flooded area shall be dedicated as a drainage easement for facilities that require regular mowing or other ongoing maintenance, at the discretion of the Director of TCI. An unobstructed fifteen (15)-foot access right-of-way shall be established; this will connect the drainage easement adjacent to the storage facility to a road or alley.

Access ramps with a maximum slope of seven to one (7:1), with a maximum cross slope of 2%, will be provided for access to the flow line of all storage facilities.

13.1.1.3 - Safety

Several considerations can help promote safety. Placing removable and efficient grates or bars on inlet/outlet pipes, fencing, and even lowering flow velocities into/out of the facility can help promote public

safety. Even with locating the facility away from busy areas, the design engineer should still maintain easy access.

13.2 - Sink Holes

Sink holes are one of several karst surface expressions that meet the TCEQ definition of a sensitive feature. Several methods are available to deal with sink holes depending on their location, both before and during construction. Due to the possibility of being a recharge feature, an approved geologic assessment of the space and surrounding area by or for TCEQ will be required before any action can be taken. For public safety, a detention basin may replace the function of the sinkhole if no endangered species are impacted. For further information, see TCEQ documents RG-348 and RG-348 Appendix A.

13.3 - Detention Basins

The primary function of a detention basin is to store and gradually release storm water runoff by way of a control structure or other release mechanism. The basin can be above or below ground, existing as collection and conveyance facilities, impoundments, and underground tanks. Detention basins are the most common type of storage facility and are usually 'dry-pond' types, which release all of the detained runoff over a short, specified length of time (usually twenty-four (24) or forty-eight (48) hours).

13.3.1 - Design types

There are four common types of detention basin: in-line detention storage, off-line detention, on-line detention, and on-site detention.

- **In-line detention:** This type of storage occurs within a channel right-of-way and only near the headwaters of a watershed or sub-area, with only the immediate landowner(s) draining to it. The channel is either oversized and/or changed to elevate the water surface inside it by a control structure or increasing roughness in order to slow the storm water and prevent downstream flooding.
- **Off-line detention:** This type of detention diverts a portion of a hydrograph from a nearby channel only when specific parameters are met. These usually are adjacent to a channel and have a side weir as a control structure, allowing overflow from the open channel.
- **On-line detention:** This type of detention passes the entire hydrograph through itself. This is often used to delay the time-to-peak discharge and is the best at controlling the rising limb of the hydrograph. These can be on-site detention basins as well, with those that are open to a channel being referred to as "flow-through" detention basins.
- **On-site detention:** This type of detention is within the development itself, usually only accepting storm water from the development itself (unless the development is right in the path of the areas' storm water, which makes it on-line) and restricting the outfall to the receiving channel. Mandatory detention areas tend to be this type.

13.3.2 - Design Guidelines

The following steps are only guidelines; depending on the size of project, several steps can be removed.

1.) Select a location and prepare a general layout for the detention basin.

2.) Determine the inflow hydrographs and maximum allowable outflow rates.

3.) Establish the maximum allowable water elevation in the basin and determine tail water condition in the outfall channel.

4.) Estimate the detention volume needed and size the outflow structure. Determine the relationship between storage, discharge, and elevation.

5.) Route the design one hundred (100) year ultimate inflow hydrograph through the basin and outflow structure with appropriate tail water condition.

6.) Adjust the detention volume and outflow structure, if necessary, until the allowable one hundred (100) year ultimate is not exceeded and the detention basin fills to or near the design maximum allowable water surface elevation.

7.) Route the other design frequencies through the basin and make appropriate adjustment to the outflow structure. Recheck the one hundred (100) year ultimate after any changes made to the outflow structure.

8.) Verify storm drains, street drainage, and channels entering the basin will function as intended, relative to the design water levels in the detention basin.

9.) Consider an emergency spillway or overflow structure for a rainfall event larger than the design storm or in the event of a blocked outfall pipe.

10.) Investigate potential geotechnical and structural problems and establish an erosion control plan.

11.) Establish the easement limits, including access for maintenance and space for multi-use.

13.3.2.1 - Location

The preferred location for a detention basin is the lowest area of the property. However, overland and storm drain flow should also be considered (if the basin will be picking up more than just the local flows), as well as its function in respect to the floodplain (with consideration to timing and backwater elevations; is it receiving all or part of the upstream flows).

13.3.2.2 - Design Frequencies

The City of San Antonio restricts the outflow rates to the undeveloped or existing five (5) year, twenty-five (25) year, and one hundred (100) year frequencies, 24 hour storm. The designed basin should not increase flood elevations upstream of the new development. See Chapter 5 "Hydrology" for approved methods of developing flows for the needed frequencies.

13.3.2.3 - Features

Several features are necessary for a detention basin. Inflow structure(s), outflow structure(s), layout, outfalls, and the areas' calculated flow (both upstream and downstream of the basin). See this chapter for layouts, inflow, and outflow structures; Chapter 7 for outfalls; and Chapter 5 on calculating required flows.

13.3.2.4 - Routing Methods

For most basins, the use of HEC-HMS is preferred as it gives a good look at the outflow hydrograph in relation to the main channel's hydrograph as well as peak timing. HEC-RAS is more difficult, but can give a better idea of where to place control structures for the basin. Solid documentation and calculations will need to be provided to the City by the design engineer, regardless of what routing methods are used.

13.3.2.5 - Freeboard

A detention basin should be designed to contain the one hundred (100) year ultimate water surface below the top of basin. The design engineer should determine if additional freeboard is required to mitigate a larger storm event from overtopping the basin.

Should the detention facility or basin meet the TCEQ requirements for a dam under their review, then the design of the dam shall meet the TCEQ freeboard requirements.

13.3.2.6 - Layouts

The layout of the basin should consider the location of the inlet to be at the opposite end of the basin from the outlet to minimize the approach velocity at the outlet. The outlet shall drain to a defined low.

For earthen side slopes, the maximum slope should not be steeper than 3H: 1V.

The bottom of a detention basin should be sloped toward the outlet. For detention basins with an earthen bottom, a minimum slope of 0.5 percent should be maintained. A concrete pilot channel should be used for slopes less than 0.5 percent with a minimum width of six (6) feet.

Access ramps into open detention basins should be located for ease of access for maintenance personnel. A maximum slope of seven to one (7H:1V) with a maximum cross slope of 2% will be provided. For underground detention basins, access manholes should be located to allow inspection and maintenance of the underground structure.

The discharge from the outflow structure, overflow structure, and auxiliary/emergency spillway shall not cause adverse downstream impact to adjacent properties and or structures.

13.3.2.7 - Overflow

An overflow structure should be provided for a rainfall event larger than the design storm or in the event of a blocked outfall pipe. The overflow discharge shall drain to a defined low.

13.3.2.8 - Auxiliary/Emergency Spillways

The purpose of an auxiliary/emergency spillway is to provide a controlled overflow relief for storm flows in excess of the design discharge for the storage facility. A suitable auxiliary/emergency spillway section for a detention facility is a broad crested weir, cut through the original ground next to the embankment. The transverse cross section of the weir is typically trapezoidal in shape. Please refer to Figure 13.3.2.8a. The invert of the spillway at the outfall should be at an elevation 1 to 2 ft above the maximum design storage elevation.

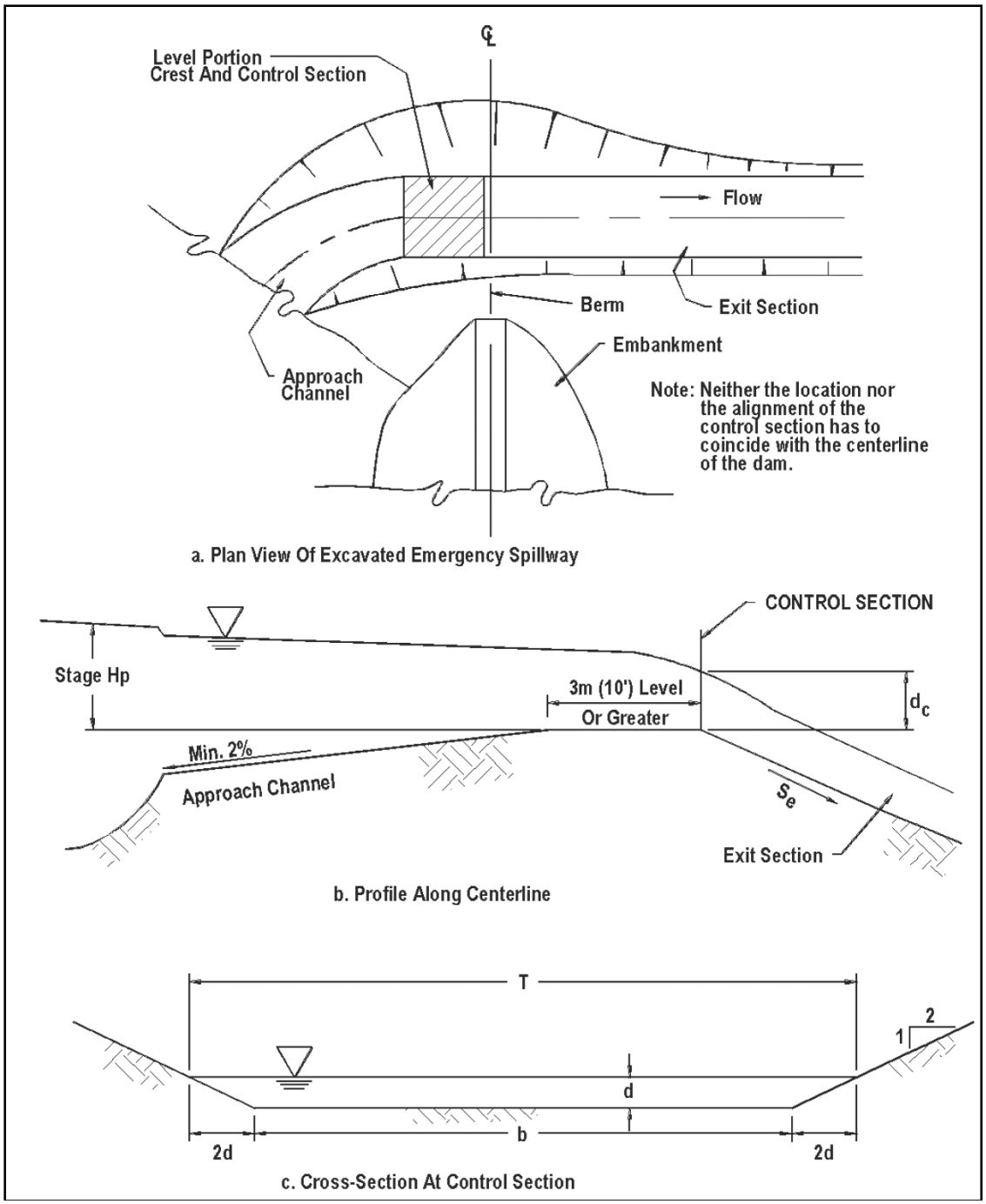

Figure 13.3.2.8a - Auxiliary/Emergency Design Schematic
(Source FWA, Urban Drainage Design Manual, Sept. 2009)

The following equation presents the relationship for computing the flow through a broad-crested auxiliary/emergency spillway.

(Equation 13.3.2.8)

$$Q = C_{sp} b H_p^{1.5}$$

Q = Emergency spillway discharge (cfs)
C $_{sp}$ = Discharge coefficient
b = Width of the emergency spillway (ft.)
H $_{p}$ = Effective head on the emergency spillway (ft.)

The discharge coefficient, C $_{sp}$, in equation 13.3.2.8 varies as a function of spillway bottom width and effective head, Figure 13.3.2.8b illustrates this relationship, Table 13.3.2.8 provides a tabulation of auxiliary/emergency spillway design parameters.

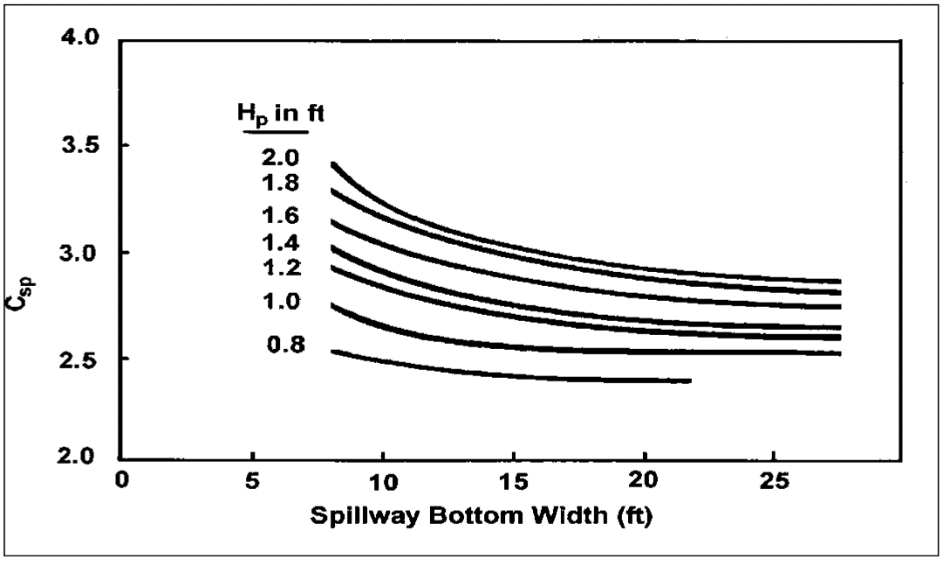

Figure 13.3.2.8b - Discharge coefficients for Spillways
(Source FWA, Urban Drainage Design Manual, Sept. 2009)

Table 13.3.2.8 - Spillway Design Parameters

Emergency Spillway Design Parameters													
H $_{p}$ (ft)		Spillway Bottom Width, b, feet											
		8	10	12	14	16	18	20	22	24	26	28	30
0.8	Q	14	18	21	24	28	32	35	-	-	-	-	-
	V $_{c}$	3.6	3.6	3.6	3.7	3.7	3.7	3.7	-	-	-	-	-
	S $_{c}$	3.2	3.2	3.2	3.2	3.1	3.1	3.1	-	-	-	-	-
1.0	Q	22	26	31	36	41	46	51	56	61	66	70	75
	V $_{c}$	4.1	4.1	4.1	4.1	4.1	4.1	4.2	4.2	4.2	4.2	4.2	4.2

	S_c	3.0	3.0	3.0	3.0	2.9	2.9	2.9	2.9	2.9	2.9	2.9	2.9
1.2	Q	31	37	44	50	56	63	70	76	82	88	95	101
	V_c	4.5	4.5	4.5	4.6	4.6	4.6	4.6	4.7	4.6	4.6	4.6	4.6
	S_c	2.8	2.8	2.8	2.8	2.7	2.7	2.7	2.7	2.7	2.7	2.7	2.6
1.4	Q	40	48	56	65	73	81	90	98	105	113	122	131
	V_c	4.9	4.9	4.9	4.9	5.0	5.0	5.0	5.0	5.0	5.0	5.0	5.0
	S_c	2.7	2.7	2.6	2.6	2.6	2.6	2.6	2.6	2.6	2.6	2.6	2.6
1.6	Q	51	62	72	82	92	103	113	123	134	145	155	165
	V_c	5.2	5.2	5.3	5.3	5.3	5.3	5.3	5.4	5.4	5.4	5.4	5.4
	S_c	2.6	2.6	2.6	2.6	2.5	2.5	2.5	2.5	2.5	2.5	2.5	2.4
	Q	64	76	89	102	115	127	140	152	164	176	188	200
1.8	V_c	5.5	5.5	5.6	5.6	5.6	5.7	5.7	5.7	5.7	5.7	5.7	5.7
	$>S_c$	2.5	2.5	2.5	2.4	2.4	2.4	2.4	2.4	2.4	2.3	2.3	2.3
2.0	Q	78	91	106	122	137	152	167	181	196	211	225	240
	V_c	5.8	5.8	5.8	5.9	6.0	6.0	6.0	6.0	6.0	6.0	6.0	6.0
	S_c	2.5	2.4	2.4	2.4	2.3	2.3	2.3	2.3	2.3	2.3	2.3	2.3

NOTE:

1. For a given H_p, decreasing exit slope from S_c decreases spillway discharge, but increasing exit slope from S_c does not increase discharge.

2. If a slope S_e steeper than S_c is used, velocity V_e in the exit channel will increase according to the following relationship:

$$V_e = V_c (S_e / S_c)^{0.3}$$

3. After Maryland SCS

13.4 - Retention Basins

The function of true retention basins is to provide storage of storm water runoff, and release via evaporation and infiltration only. Those retention basins that provide for a slow release of storm water over an extended period of several days or more are referred to as extended detention facilities. Retention facilities may also be used for recreation, pollutant removal, groundwater recharge, aesthetics, or even water supply. Like detention basins, they can be above or below ground. Most facilities are designed for both storm water impoundment and quality control.

Storm water retention with or without permanent wet pool will not be acceptable methods of storm water mitigation unless the facility will remain privately owned, operated, and maintained.

13.4.1 - Design Guidelines

13.4.1.1 - Design Frequencies

The design frequency should be the one hundred (100) year ultimate, 24 hour storm.

13.4.1.2 - Routing Methods

The routing method is similar to detention basins, but with a zero discharge.

13.4.1.3 - Freeboard

The basin should contain the one hundred (100) year ultimate water surface.

13.4.1.4 - Overflow

An overflow structure should be provided for storms greater than the one hundred (100) year ultimate and for multiple storms over a short period of time. The overflow discharge shall drain to a defined low.

13.5 - Downstream Flow Analysis

A downstream flow analysis should be performed with the routed storm through the storage facility. The length of reach downstream of the storage facility to be analyzed should be to a point where the drainage area of the stream will be ten times the drainage area to the basin.

13.6 - Structures

13.6.1 - Dams

All hydrology and hydraulic properties of a dam will be reviewed by the TCI Department with regard to spillway design, freeboard hydraulics, backwater curves, and downstream effects due to the dam site.

13.6.1.1 - Existing Dam

Development below existing dams will take into account the original design conditions of the existing dam.

13.6.1.2 - Proposed Dam

All dams, as defined by section 13.6.1.5 shall be approved by the Dam Safety Team of the TCEQ for safety. All other new dams shall be designed in accordance with acceptable design criteria as approved by the Director of TCI, or his authorized representative.

13.6.1.3 - Breach Analysis

For Dams defined by the TCEQ, a breach analysis checks will be required.

13.6.1.4 - Emergency Action Plan

An emergency action plan should be provided if the dam is regulated by TCEQ.

13.6.1.5 - Approval of TCEQ Dam Safety Program

The design engineer should determine if the proposed or existing dam or reservoir would be regulated by TCEQ and require their approval.

The following is from the Texas Administrative Code, Title 30 - Environmental Quality, Part 1 - Texas Commission on Environmental Quality, Chapter 299 - Dams and Reservoirs, Subchapter A - General Provisions, Rule §299.1 - Applicability.

(a) This chapter applies to design, review, and approval of construction plans and specifications; and construction, operation and maintenance, inspection, repair, removal, emergency management, site security, and enforcement of dams that:

(1) have a height greater than or equal to 25 feet and a maximum storage capacity greater than or equal to 15 acre-feet, as described in paragraph (2) of this subsection;

(2) have a height greater than six feet and a maximum storage capacity greater than or equal to 50 acre-feet;

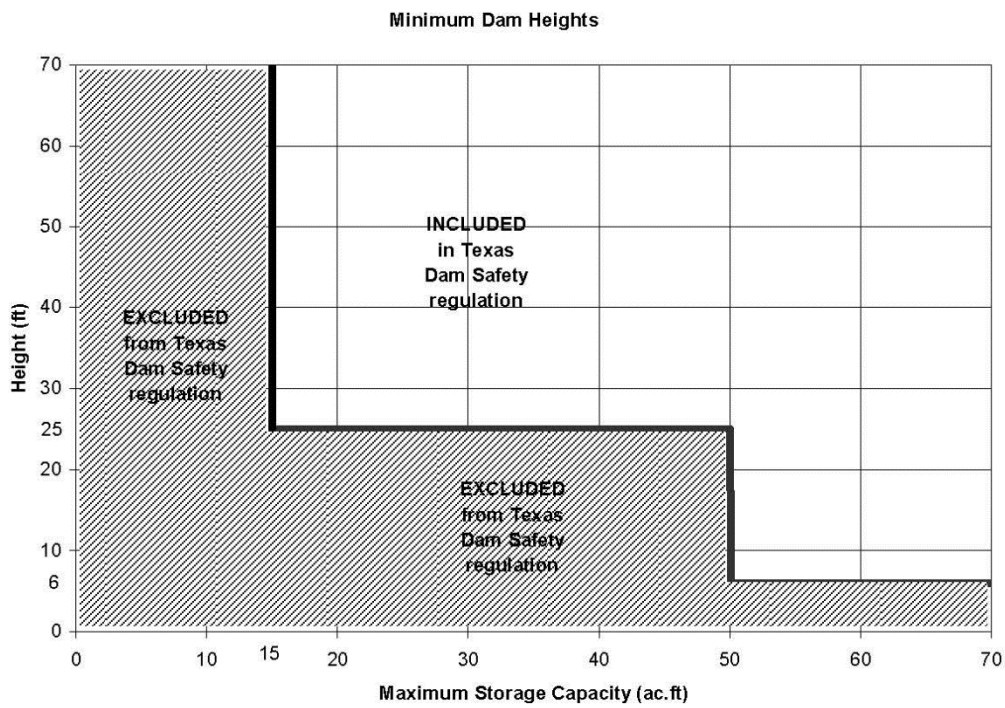

Figure 30 TAC § 299.1(a)(2)

(3) are a high- or significant-hazard dam as defined in §299.14 of this title (relating to Hazard Classification Criteria), regardless of height or maximum storage capacity; or

(4) are used as a pumped storage or terminal storage facility.

(b) This chapter provides the requirements for dams, but does not relieve the owner from meeting the requirements in Texas Water Code (TWC), Chapter 11, and Chapters 213, 295, and 297 of this title (relating to Edwards Aquifer; Water Rights, Procedural; and Water Rights, Substantive; respectively). All applicable requirements in those chapters will still apply.

(c) This chapter does not apply to:

(1) dams designed by, constructed under the supervision of, and owned and maintained by federal agencies such as the Corps of Engineers, International Boundary and Water Commission, and the Bureau of Reclamation;

(2) embankments constructed for roads, highways, and railroads, including low-water crossings, that may temporarily impound floodwater, unless designed to also function as a detention dam;

(3) dikes or levees designed to prevent inundation by floodwater;

(4) off-channel impoundments authorized by the commission under TWC, Chapter 26; and

(5) above-ground water storage tanks (steel, concrete, or plastic).

(d) All dams must meet the requirements in this chapter, including dams that do not require a water right permit, other dams that are exempt from the requirements in Subchapter C of this chapter (relating to Construction Requirements), and dams that are granted an exception as defined in §299.5 of this title (relating to Exception).

13.6.2 - Inflow Structure

The inflow structure could be the outlet from a storm drain system, roadway culvert, scupper, chute or channel. The discharge velocity at outlets into an earthen basin should be check for erosion control. The basin hydraulics should be analyzed for the impacts to the inflow structure and upstream drainage system.

13.6.3 - Outfall Structure

All spillway discharges shall be adequately routed to the centerline of the natural low below the dam site. The adequate routing of spillway discharges pertains to the hydraulic routing of the one hundred (100) year storm event for dedication of drainage easement limits. Probable Maximum Precipitation (PMP) for flood routing or breaches will only be considered for safety considerations (that is, the placement of building and the setting of minimum floor slab elevations below the dams). Any proposed concrete dam structure need not have a spillway capable of routing a PMP flood; however, it shall be shown to be structurally capable of withstanding any range of flood conditions with regard to possible failure due to sliding, overturning, and structural integrity, up to and including the PMP flood.

13.6.3.1 - Primary Spillway

The primary spillway is the outfall structure for the design storms.

13.6.3.2 - Secondary Spillway (Auxiliary Spillway)

The spillway section of any earthen dam, as defined in section 13.6.1.5 shall be large enough to pass a PMP flood, as defined by the NRCS, without overtopping the crest of the dam in accordance with TCEQ regulations.

13.6.4 - Pumps

Pumped detention systems are not be acceptable methods of storm water mitigation, unless the facility is to remain privately owned, operated, and maintained. The City will approve the use of a pumped facility for private use under the following conditions:

13.6.4.1 - Condition 1

A gravity system is not feasible from an engineering and economic standpoint.

13.6.4.2 - Condition 2

At least two (2) pumps are provided each of which is sized to pump the design flow rate.

13.6.4.3 - Condition 3

The selected design outflow rate must not aggravate downstream flooding.

13.6.4.4 - Condition 4

Controls and pumps should be designed to prevent unauthorized operation and vandalism.

13.6.4.5 - Condition 5

Adequate assurance is provided that the system will be operated and maintained on a continuous basis.

13.7 - Maintenance Considerations

13.7.1 - Operation

Most detention basins will not require an operational plan. The exception is ones that have a pump system or gates to control the discharge. These exceptions will require an operational plan. These plans should be submitted to the City and approved by the Director of TCI.

13.7.2 - Maintenance Schedule

13.7.2.1 - Regional Detention Facilities

Maintenance of publicly owned facilities will be the responsibility of the City. Maintenance of private facilities is the responsibility of the property owner or the community association and must be specified in the maintenance schedule submitted to the City. A maintenance schedule for both publicly owned and privately owned facilities must be approved by the Director of TCI prior to approval of construction drawings. See Chapter 4.12 for additional guidance on maintenance standards.

13.7.2.2 - On-Site Storm Water Management Features

On-site storm water management features must be privately owned and shall be maintained by the community association or property owner. A maintenance schedule shall be submitted to the Department of TCI and approved by the Director of TCI prior to approval of construction plans. The City of San Antonio will have the right to do periodic inspections of privately owned and maintained detention facilities to confirm that the maintenance schedule is being implemented.

13.8 - Certification

13.8.1 - Detention Pond Plan Conformance Form

The design engineer should complete a "Detention Pond Plan Conformance" form after the completion of the detention pond and provide the completed form to the City.

13.8.2 - As-Built Plans for Dams

As-Built plans should be provided upon completion of the dam and impoundment area if required by the owner or by TCEQ requirements.

13.9 - References

13.9.1 - Reference Citation

A. Harris County Flood Control District. Storm water Detention Basins. Section 6 in *Policy Criteria & Procedure Manual for Approval and Acceptance of Infrastructure.* Harris County Flood Control District, Houston, Texas, October 2004, updated December 2010. Retrieved from http://www.hcfcd.org/dl_manuals.html

13.9.2 - References

- Harris County Flood Control District. *Policy Criteria & Procedure Manual for Approval and Acceptance of Infrastructure.* Harris County Flood Control District, Houston, Texas, October 2004, updated December 2010. Retrieved from http://www.hcfcd.org/dl_manuals.html

- TCEQ. *Complying with the Edwards Aquifer Rules - Technical Guidance on Best Management Practices.* RG-348. Texas Commission on Environmental Quality, Field Operations Division, Austin, Texas, July 2005.

- TCEQ. *Optional Enhanced Measures for the Protection of Water Quality in the Edwards Aquifer (Revised) - Appendix A to RG-348 - Complying with the Edwards Aquifer Rules: Technical Guidance on Best Management Practices.* RG-348A. Texas Commission on Environmental Quality, Chief Engineer's Office, Water Programs, Austin, Texas, September 2007.

- TCEQ. *Hydrologic and Hydraulic Guidelines for Dams in Texas.* GI-364. Texas Commission on Environmental Quality, Field Operations Support Division, Dam Safety Program, Austin, Texas, January 2007.

- TCEQ. *Design and Construction Guidelines for Dams in Texas.* RG-473. Texas Commission on Environmental Quality, Field Operations Support Division, Dam Safety Program, Austin, Texas, August 2009.

- FHWA. *Urban Drainage Design Manual.* Hydraulic Engineering Circular No. 22, 3rd edition, FHWA-NHI-10-009. Federal Highway Administration, U.S. Department of Transportation, Washington, DC, Sept. 2009.

CHAPTER 14 - DRAINAGE EASEMENTS

14.1 - Introduction

This chapter provides the general guidelines for easements needed for the storm drainage facilities.

The dedication or acquisition of drainage easements to cover drainage system components is necessary to allow the orderly development and transfer of storm water across properties. Where a subdivision is traversed by a watercourse, drainage way, natural channel, or stream, an easement conforming substantially to the limit of such watercourse shall be provided, including additional width as outlined below.

Easement requirements are specified in the following subsections of this chapter for particular storm water management facilities:

A. Subsection 14.3.2 Natural Channels

B. Subsection 14.5 Storage Facilities

C. Subsection 14.3.1.2 Concrete Channels

D. Subsection 14.3.1.1 Improved Earth Channels

E. Subsection 14.2 Storm Drain Systems

F. Subsection 14.4 Pump Stations

Drainage easements will be required for all storm water management facilities accepting runoff from properties other than the lot on which the facility exists or will be constructed.

Drainage easements may be designated "Public Drainage Easement" or "Private Drainage Easement". A private drainage easement is typically necessary when storm water is to be conveyed across private property from a separate private property up to a contributing drainage area of 100 acres. A Public drainage easement is typically necessary when the off-site contributing drainage area exceeds 100 acres or if the contributing area is a FEMA designated floodplain. Additionally, drainage easements are typically necessary when storm water is to be conveyed across private property from public property, public rights-of-way and easements, or public infrastructure to an established channel, creek, or other public drainage system.

14.2 - Storm Drain Systems

Minimum easement widths for storm drains will be the greater of fifteen (15) feet or six (6) feet on both sides of the extreme limits of the width of storm drain lines or components. See Figure 14.2.

Example: The easement width for a three (3) barrel ten (10)-foot wide box culvert with six (6)-inch walls would be (3 x 10')+(4 x 0.5')+(2 x 6') = 44'.

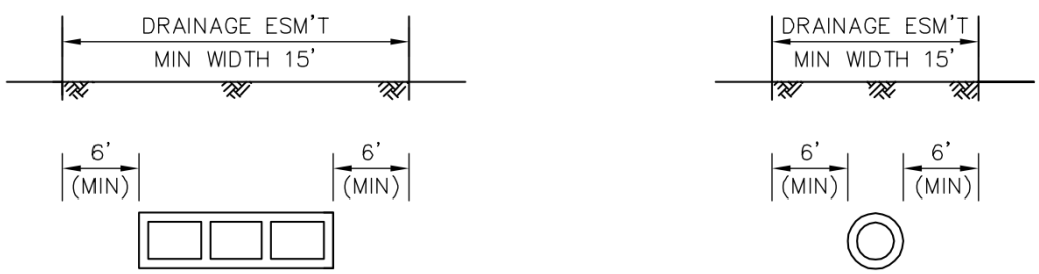

Figure 14.2 - Storm Drain System Easement

14.3 - Open Channels

14.3.1 - Constructed Channels

Constructed channels are created by the movement of earth material by mechanical means and the earth material may be covered by vegetation or other material to minimize erosion.

14.3.1.1 - Improved Earth Channels

Easements for improved earth channels shall extend a minimum of two (2) feet on one (1) side and fifteen (15) feet for an access road on the opposite side of the extreme limits of the channels do not parallel and adjoin an alley or roadway. When such channels do parallel and adjoin an alley or roadway, the easement shall extend a minimum of two (2) feet on both sides of the extreme limits of the channel. Where utilities are installed in the access road of the drainage easement, the easement shall extend two (2) feet on one (1) side and seventeen (17) feet on the opposite side of the extreme limits of the channel. See Figure 14.3.1.1. "Extreme Limits" of the channel shall mean the side slope intercept with the natural ground or proposed finished ground elevation. Where designed channel bottoms exceed one hundred (100) feet in width, the fifteen (15)-foot extra width shall be provided on both sides of the channel.

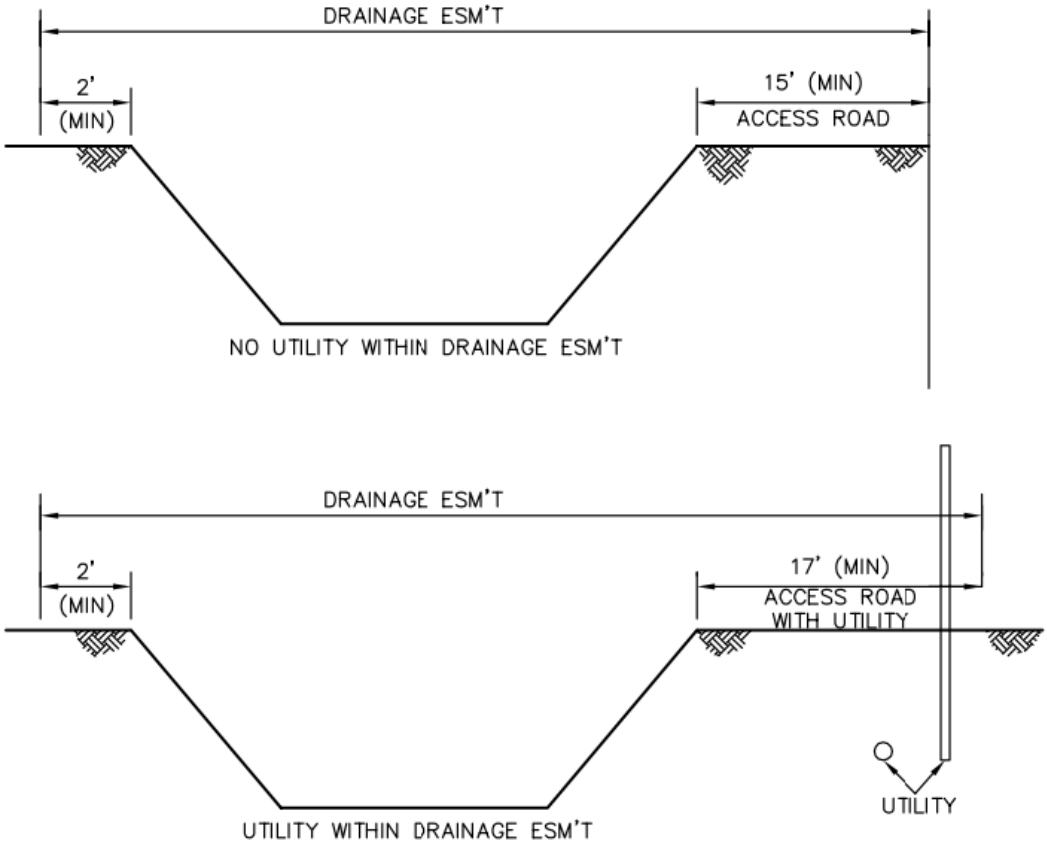

Figure 14.3.1.1 - Earth Channel Easement

14.3.1.2 - Concrete Channels

Easements for concrete lined channels, except for concrete flumes (see Section 14.3.1.4), shall extend a minimum of two (2) feet on one (1) side and fifteen (15) feet for an access on the opposite side of the extreme limits of the channel. When such channels do parallel and adjoin an alley or roadway, the easement shall extend a minimum of two (2) feet on both sides of the extreme limits of the channel. See Figure 14.3.1.2.

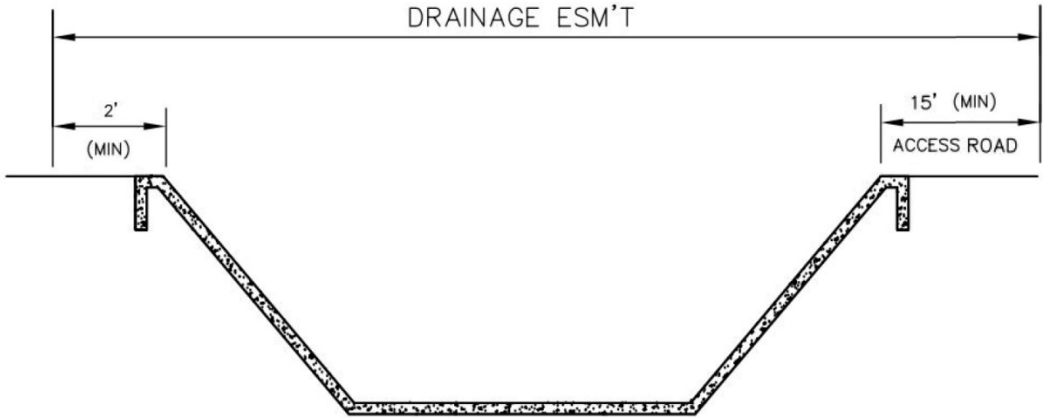

Figure 14.3.1.2 - Concrete Channel Easement

14.3.1.3 - Interceptor Channels

Drainage easements for proper conveyance of upstream storm water runoff shall be required on all subdivision plats where upstream contributing area exceeds the criteria indicated below. Interceptor drains shall be constructed prior to the issuing of building permits on any lot that would intercept natural drainage.

A. Interceptor drainage easements and channels shall be provided for residential subdivisions where the drainage area to the back of platted lots exceeds the depth of two (2) average residential lots with equivalent zoning.

B. Interceptor drainage easements shall be required on nonresidential subdivision plats where the off-site drainage area contributing to the proposed development exceeds three (3) acres.

Interceptor drainage easements shall extend a minimum of two (2) feet on both sides of the extreme limits of the channel. See Figure 14.3.1.3.

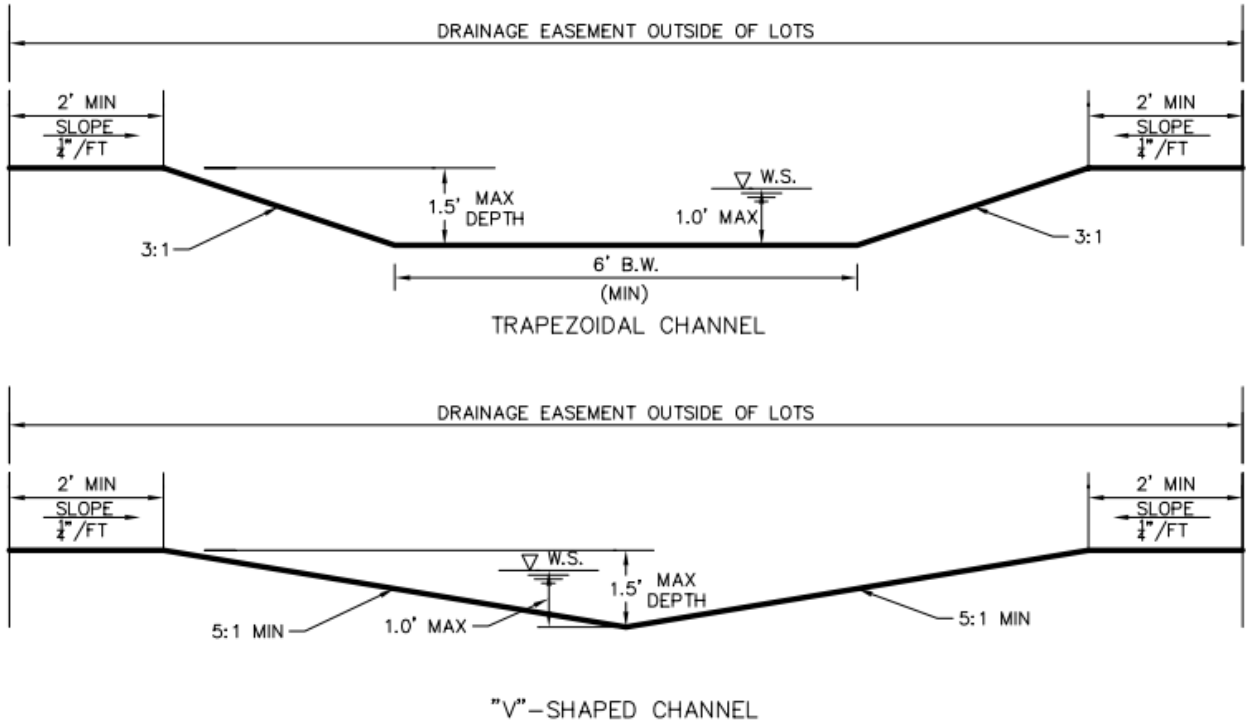

Figure 14.3.1.3 - Interceptor Channel Easement

14.3.1.4 - Concrete Flumes

Side-lot flumes are concrete-lined channels that convey storm water runoff between residential lots from street to street or from a street to a storm drain, drainage channel, natural creekway, or floodplain. Easements for side-lot flumes shall extend a minimum of two (2) feet on one (1) side and ten (10) feet for access on the opposite side.

Private side-lot flumes shall have appropriate easement widths as determined by the developer's engineer.

14.3.2 - Natural Channels

The limits of easements for natural watercourses shall be the ultimate one hundred (100) year floodplain or the ultimate twenty-five (25) year plus freeboard whichever is less. In floodplain areas where ongoing maintenance is required or the floodplain will be reserved for use by the public, the drainage easements shall be maintained by a public entity and the property will be dedicated to the city as a public drainage easement. See Figure 14.3.2.

14.3.3 - Maintenance Access Drainage Easement

An unobstructed access drainage easement connecting the channel drainage easement with an alley or roadway, parallel to or near the easement shall be provided at a minimum spacing of one (1) access easement at approximately one thousand (1,000)-foot intervals. The access easement shall be a minimum of fifteen (15) feet in width and shall be kept clear of obstructions that would limit maintenance vehicle access. Additional access points may be required if the flow line of the designed channel incorporates grade control structures or vehicular bridges that may block channel access to maintenance equipment.

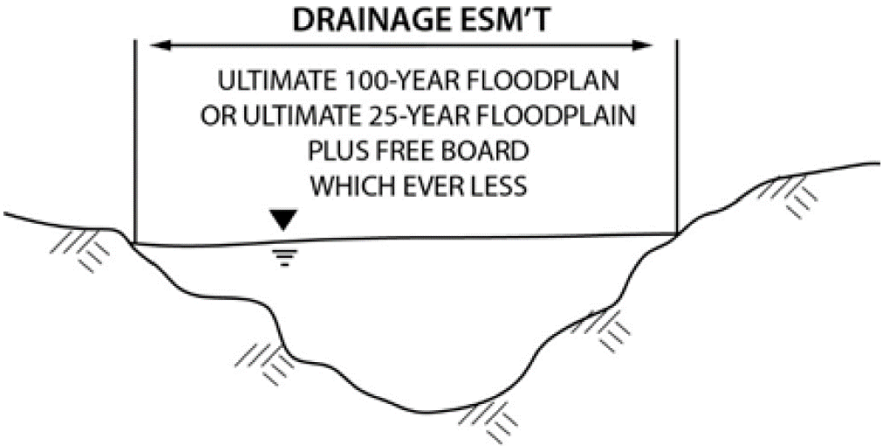

Figure 14.3.2 - Natural Channel Easement

14.4 - Pump Stations

A drainage easement will be required for all storm water pump stations. Additional ten (10) foot minimum drainage easement in width shall be required around the pump station for maintenance. All pump stations not included in a street right-of-way or within the storage facilities drainage easement and not adjacent to a public street will require a drainage easement for a fifteen (15) foot width access to the pump station.

14.5 - Storage Facilities

Drainage easements will be required for all storm water management facilities accepting runoff from properties other than the lot on which the facility exists or will be constructed.

For regional detention facilities, the drainage easement will encompass the one hundred (100) year pool elevation in addition to all structural improvements (levees, dikes, berms, outfall structures, etc.) necessary to contain the pool. The easement will extend, at a minimum, to the toe of the downstream embankment. The easement shall also extend to a minimum of fifteen (15) feet outside both the one-hundred (100) year pool and the structural improvements to facilitate maintenance as well as public safety.

A one hundred (100) year storm event shall be routed through the proposed dam or basin and all land subject to flooding shall be dedicated as drainage easement. An unobstructed fifteen (15) foot access easement around the periphery of the flooded area shall be dedicated as drainage easement for facilities that require regular mowing or other ongoing maintenance, at the discretion of the Director of TCI. An unobstructed fifteen (15) foot access shall be established, which connects the drainage easement adjacent to the dam structure to a road or alley and the access to be dedicated as a drainage easement.

The adequate routing of spillway discharges pertains to the hydraulic routing of the one hundred (100) year frequency flood for dedication of drainage easement limits.

CHAPTER 15 - LOTS / UNFLOODED ACCESS

15.1 - Introduction

This chapter is for additional drainage criteria for a lot or lots within a development. The proper grading of a lot(s) is necessary so there is no impact to adjoining property or to the proposed development.

15.2 - Standard Lot Grading

A note shall be placed on all plats stating that residential finished floor elevations must be a minimum of eight (8) inches above final adjacent grade. A grading plan shall be prepared and submitted to the City, which indicates typical lot grading for all lots in the subdivision using typical FHA lot grading types (A, B, and C). See Figure 15.2. A more detailed grading plan is also acceptable. No more than two (2) average residential lots may drain onto another lot, unless a drainage easement is dedicated to contain the runoff.

See Section 6.2.2 where Dwelling units are located on the downhill side of a T-intersection, Cul-de-sac, or knuckle.

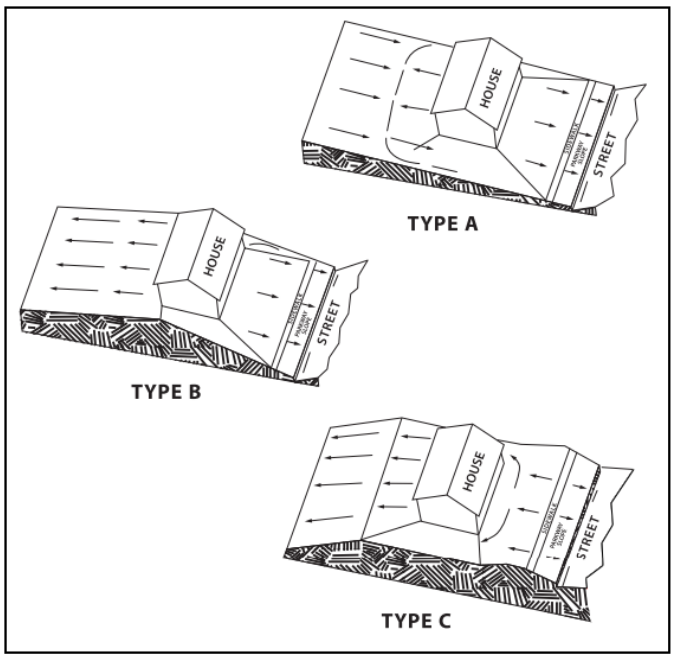

Figure 15.2 - Typical FHA Lot Grading

15.3 - Unflooded Access

15.3.1 - Proposed Development

During a design storm event unflooded access (within the "Proceed with Caution" range per Figure 4.3.1C) shall be available from each proposed new development to an adjacent public street during a regulatory flood event.

15.3.2 - Unflooded Access Distance on Existing Public Street

Additionally, unflooded access shall be accessible to an arterial street that is not adjacent to the development or to a distance of one-quarter mile, whichever is less, during a future conditions twenty (20) percent annual chance (five-year) flood event.

15.3.3 - Exception

The Director of TCI may waive criterion 15.3.2 of this requirement for developments under three (3) acres in size.

15.4 - Interceptor Channels

Interceptor channels for proper conveyance of upstream storm water sheet flow shall be required on all subdivision plats where upstream contributing area exceeds the criteria indicated on the following items. (See Figure 9.3.10.) Interceptor channels shall be constructed prior to the issuing of building permits on any lot that would intercept natural drainage.

A. Interceptor channels shall be provided for residential subdivisions where the drainage area to the back of platted lots exceeds the depth of two (2) average residential lots with equivalent zoning.

B. Interceptor channels shall be required on nonresidential subdivision plats where the off-site drainage area contributing to the proposed development exceeds three (3) acres.

15.5 - Lot and Property Line Crossings

In cases where drainage easements cross lot and property lines, a statement shall be added to the plat that no fencing or structures that will interfere with adequate drainage flow will be allowed on or across such lines. Fencing may be allowed across drainage easements only in accordance with the following restrictions:

A. Bottom of fence shall be a minimum of the flow depth, plus freeboard (see Table 9.3.14) above design flow line of channel or drain. Any fencing extending below the depth stated above shall be hinged or otherwise designed to allow the design flow to pass. Design details shall be provided.

B. A hinged gate will be placed across the entire width of the drainage easement. Access must be provided to storm water operations staff at all times to allow access to the easement for the city crews to perform maintenance.

C. Fence posts located within the easement must be structurally designed to resist damage from the storm water flows and impact from debris.

D. A floodplain development permit will be required to construct a fence within an easement within the one hundred (100) year floodplain.

CHAPTER 16 - VEGETATION

16.1 - Introduction

This chapter provides information on methods and recommendations for plant materials to be used for the vegetation or revegetation of drainage facilities within the San Antonio area. Establishment of a robust vegetative cover is critical to the proper functioning of drainage facilities, such as grass-lined channels, earthen detention basins, earthen retention ponds, and wetlands. Vegetation serves multiple purposes, including stabilization of facilities, prevention or reduction of erosion, removal of pollutants in storm water runoff, and improvement of wildlife habitat. The modified subtropical climate, prevalence of introduced weeds or Johnson Grass, and variety of soil types encountered in the San Antonio area virtually mandate the prompt implementation of a temporary and/or permanent revegetation plan to meet TPDES requirements.

During the design and construction processes and thereafter, existing vegetation should be maintained and preserved intact in order to minimize the effects of construction activities and the changes to the flow characteristics of the existing waterways.

16.2 - General Guidelines for Recommended Vegetation

16.2.1 - Grasses

New or improved earthen channels, earthen retention facilities, and earthen detention facilities will be vegetated by seeding or sodding. Eighty-five percent (85%) of the disturbed surface area must established vegetation before the City will accept the channel for maintenance if the facility is within a public easement. Facilities that are within private easements shall also meet the same seeding and sodding requirements.

New earthen facilities and alterations to existing facilities shall be planted with drought resistant, low growth, native species grasses which will allow unobstructed passage of floodwaters. Recommended grasses and groundcover can be found in Appendix E "San Antonio Recommended Plant List - All Suited to Xeriscape Planting Methods" found in the current City of San Antonio Unified Development Code. Johnson grass, giant ragweed and other invasive species shall not be allowed to promulgate in earthen facilities.

16.2.2 - Woody Plantings

16.2.2.1 - Trees

While allowing for reasonable improvement of land within the City and City's ETJ, it is stated public policy of the City to maintain, to the greatest extent possible, existing trees and to add to the tree population to promote a high tree canopy goal. The planting of additional trees and preservation of existing trees in the City and the City's ETJ is intended to accomplish a variety of goals. These goals can be found in Sec. 35-523 of the UDC. Recommended trees can be found in Appendix E "San Antonio Recommended Plant List - All Suited to Xeriscape Planting Methods" found in the current City of San Antonio Unified Development Code.

16.2.2.2 - Shrubs

Recommended shrubs can be found in Appendix E "San Antonio Recommended Plant List - All Suited to Xeriscape Planting Methods" found in the current City of San Antonio Unified Development Code.

16.3 - Tree Preservation Requirements

The City of San Antonio Tree Preservation requirements can be found in the latest version of the City of San Antonio UDC.

16.4 - Preparation of a Planting Plan

A mitigation plan will be required if the above minimum preservation requirements are not met. See latest version of the City of San Antonio Tree Ordinance for requirements.

16.5 - References

- City of San Antonio. San Antonio Recommended Plant List—All Suited to Xeriscape Planting Methods. Appendix E in *Unified Development Code* . Retrieved from http://www.sanantonio.gov/dsd/udc.asp

- University of Texas at San Antonio. *Technical and Field Guide: Management Practices for Natural Waterways.* University of Texas at San Antonio, City of San Antonio, San Antonio, Texas, February 2008.

- International Society of Arboriculture

- Texas Parks and Wildlife

- USACE

CHAPTER 17 - SOFTWARE

17.1 - Introduction

Hydrology and Hydraulics software are tools used by engineers to analyze, study, and design water resources features and infrastructure. The software used by engineers is a critical portion of local studies. This chapter will attempt to serve as a base line for the most available software used by local engineers as well as City of San Antonio staff. Additional and specialized software may be acceptable for use, with the approval of the office of the Director of TCI or his authorized representative.

The following software are acceptable.

- HEC Products

    - HEC-HMS
    - HEC-RAS
- XP Solutions
    - XPSWMM
    - XPSTORM
- Auto Desk
    - AutoCAD - HydraFlow
- Esri
    - ArcGIS
- Bentley
    - MicroStation - Geopak
    - FlowMaster
    - CulvertMaster
    - PondPack
    - STORMCAD
- Misc.
    - HAHNHAUS
    - Hy-8
    - WINSTORM

CHAPTER 18 - DATA SOURCES

18.1 - Introduction

This chapter will identify commonly used data sources for use in studies. These sources are subject to change and may or may not be a free resource. These include City of San Antonio, Bexar County, SARA, FEMA, etc.

18.2 - City of San Antonio

For general geo-spatial information about San Antonio that include individual shape-file and geodatabase for political boundaries, roadways, special zones and districts, library locations, park boundary, trails and even 2-foot contours. This data can be found in the City of San Antonio GIS department website. Please note the following link may change. http://www.sanantonio.gov/GIS/GISData.aspx

18.3 - Bexar County

The Bexar County website contains a GIS portal (http://bexar.maps.arcgis.com/home/) to allow users to view and access GIS data. GIS data can be retrieved via the Open Data Portal section (http://www.bexar.org/569/GIS-Open-Data)

18.4 - San Antonio River Authority

The SARA website contains useful sources of GIS data sets. The first is the Digital Data Model Repository (D2MR) (http://gis.sara-tx.org/D2MR/), used to access Hydrology, Hydraulic and geo-spatial data (GIS and CADD data available). To access data a user will need to create a user name and password.

Additionally SARA hosts 1-foot LiDAR based contours for all of Bexar County, broken into panels a user can access GIS data shape-files from the following link (http://www.sara-tx.org/public_services/gis_information/contours.php)

18.5 - Federal Emergency Management Agency

For the latest Flood Insurance Rate Map please refer to the FEMA Map Service Center (https://msc.fema.gov/portal) Data found in the Map Service Center includes FIRM maps and the latest Letters of map Changes (LOMC) approved by FEMA.

18.6 - U.S. Army Corps of Engineers

To access the latest hydrology and hydraulic modeling software please refer to the US Army Corps of Engineers Hydrologic Engineering Center website. http://www.hec.usace.army.mil/

18.7 - Texas Natural Resources Information System

To access State wide data set please refer to the Texas Natural Resource Information System (TNRIS) website. http://www.tnris.org/

18.8 - U.S. Department of Agriculture - Natural Resources Conservation Service

For information on the NRCS please refer to the following website (http://www.nrcs.usda.gov/wps/portal/nrcs/site/national/home/)

18.9 - U.S. Fish and Wildlife Service

For contact information for the US Fish and Wildlife Serve please refer to the following: http://www.fws.gov/

CHAPTER 19 - DEFINITIONS

19.1 - Introduction

The following definitions are used within this manual. A number of definitions were copied from the UDC Appendix A Definitions that relate to drainage and this manual. The UDC definitions are indicated by an asterisk symbol.

1% annual chance floodplain, (formerly 100-year floodplain)*: The land within a community subject to a one (1) percent or greater chance of flooding in any given year. These areas are typically designated as a Federal Emergency Management Agency (FEMA) Zone A, AE, AH, or AO on FEMA Flood Insurance Rate Maps (FIRM Panels).

All weather surface (parking and vehicular access)*: Vehicular "all weather surfaces" shall constitute: poured concrete on prepared subgrade; hot laid asphalt on a prepared base course; single, double, or triple asphalt surface treatment (consisting of applications of asphaltic material, each covered with aggregate) on a prepared base course. Brick/concrete block/tile/flagstone set in mortar or on a prepared base course. The director of planning and development services shall determine if other materials may fit

within this category of surface; however, in no case shall a material be considered a "all weather surface" if such surfaces generates or produces any dust or particulate matter that could be airborne to adjacent properties such as occurs with compacted base materials.

All weather surface (pedestrian walkways and access)*: All weather surfaces shall constitute poured concrete, hot laid asphalt, or tile/ flagstone/brick/concrete block. The director of planning and development services shall determine if other materials may fit within this category of surface. For pedestrian application crushed granite, marble and rock slag may be considered an "all weather surface".

All weather surface (temporary access)*: All weather surfaces for temporary construction access or event access such as "homes shows", carnivals, etc., shall be permitted by the director of planning and development services and may be poured concrete, hot or cold laid asphalt or tile/brick/flagstone/concrete block, compacted base material, crushed granite, or gravel for a period not to exceed one hundred twenty (120) days.

Area of flood inundation*: Sites that are subject to flooding as a result of water ponding in the controlled storage areas of dams, detention and retention ponds.

Area of shallow flooding*: A designated AO, AH, or VO zone on a community's flood insurance rate map (FIRM) with a one (1) percent chance or greater annual chance of flooding to an average depth of one (1) to three (3) feet where a clearly defined channel does not exist, where the path of flooding is unpredictable and where velocity flow may be evident. Such flooding is characterized by ponding or sheet flow.

Area of special flood hazard*: The land in the floodplain within a community subject to a one (1) percent or greater chance of flooding in any given year. This area is also known as the 100-year floodplain. The area is designated as a Federal Emergency Management Agency Zone A, AE, AH, AO on the flood insurance rate maps.

Base flood*: The flood having a one (1) percent chance of being equaled or exceeded in any given year. (100-year frequency flood).

Basement*: Any area of the building having its floor subgrade (below ground level) on all sides.

Best management practices (BMP)*: An effective integration of storm water management systems, with appropriate combinations of landscape conservation, enhancement, structural controls, impervious cover, schedules of activities, prohibitions of practices, maintenance procedures and other management practices which provide an optimum way to convey, store and release runoff, so as to reduce peak discharge, remove pollutants, and enhance the environment.

Capital improvements*: Public facilities which have a life expectancy of three (3) or more years that are owned and operated by the city, and are treated as capitalized expenses according to generally accepted accounting principles. This definition does not include costs associated with the operation, administration, maintenance, or replacement of capital improvements.

Capital improvements program*: The list of recommended capital improvements to be constructed during the forthcoming five-year period submitted pursuant to section 118 of the City Charter.

Canopy tree*: A canopy tree is either a medium or large deciduous tree, with a mature height of more than twenty-five (25) feet at maturity.

CLOMR*: A conditional letter of map revision. A CLOMR will be submitted for FEMA approval for all proposed physical changes to the floodplain that will result in a change to the floodplain boundary.

Conservation easement*: A non-possessory interest of a holder in real property that imposes limitations or affirmative obligations designed to:

- Retain or protect natural, scenic, or open-space values of real property or assure its availability for agricultural, forest, recreational, or open-space use;

- Protect natural resources;

- Maintain or enhance air or water quality; or

- Preserve the historical, architectural, archeological, or cultural aspects of real property.

(Source: V.T.A. Natural Resources Code § 183.001).

Dam: *Any barrier or barriers, with any appurtenant structure, constructed for the purpose of either permanently or temporarily impounding water.*

(Source: TCEQ Chapter §§299.2.(14))

Detention*: The temporary storage of storm runoff, which is used to control the peak discharge rates, and which provides gravity settling of pollutants.

Detention time*: The amount of time a parcel of water actually is present in a storm water basin. Theoretical detention time for a runoff event is the average time a parcel of water resides in the basin over the period of release from the BMP.

Development*: Any manmade change in improved and unimproved real estate, including but not limited to buildings or other structures, mining, dredging, filling, grading, paving, excavation or, drilling operations or storage of equipment or materials.

Development plan*: The proposal for development including such drawings, documents and other information necessary to illustrate completely the proposed development. The development plan shall specifically include such information as required by this chapter.

Drainage system*: All streets, gutters, inlets, swales, storm drains, channels, streams, or other pathways, either naturally occurring or manmade, which carry and convey storm water during rainfall events.

Easement*: A grant of one (1) or more of the property rights by the property owner to and/or for the use by the public, a corporation, or another person or entity.

Easement, utility*: An easement granted for installing and maintaining utilities, across, over or under land together with the right to enter thereon with machinery and other vehicles necessary for the maintenance of utilities.

Ecological functioning*: The fundamental **ecological services** that floodplain**,** riparian areas or **SMZ areas** perform fall into three major categories: (1) hydrology and sediment dynamics, (2) biogeochemistry and nutrient cycling, and (3) habitat and food web maintenance while performing these ecological services: assist in mitigating nonpoint source pollution; stabilize stream banks and reduce floodwater velocity resulting in reduced erosion and downstream flood peaks; maintain water levels in streams, lakes, water tables and aquifers; sequester greenhouse gases to improve air quality; and supply food, cover and water for a diversity of terrestrial and aquatic wildlife especially migratory birds. Adverse impact includes the physical impacts due to erosion, scour and deposition associated with increased frequency and volume of runoff that negatively alters the ecological functioning of the receiving water body. The NRCS allowable method will be used to calculate impact and capacity of the receiving water body/floodplain within the watershed. (https://www.nrcs.usda.gov/wps/portal/nrcs/detail/national/technical/?cid=nrcs143_014199).

Edwards Aquifer Recharge Zone (EARZ)*: That area where the stratigraphic units constituting the Edwards Aquifer out crop, and including the outcrops of other formations in proximity to the Edwards Aquifer, where caves, sinkholes, faults, fractures, or other permeable features would create a potential for recharge of surface waters into the Edwards Aquifer. The recharge zone is identified as that area designated as such on official maps located in the offices of the Texas Commission on Environmental Quality (TCEQ) and the Edwards Aquifer Authority.

Edwards Aquifer Transition Zone*: That area where geologic formations out crop in proximity to and south and southeast of the recharge zone and where faults, fractures, and other geologic features present a possible avenue for recharge of surface water to the Edwards Aquifer, and including portions of the Del Rio Clay, Buda Limestone, Eagle Ford Group, Austin Chalk, Pecan Gap Chalk, and Anacacho Limestone. The transition zone is identified as that area designated as such on official maps in the offices of the Texas Commission on Environmental Quality (TCEQ) and the Edwards Aquifer Authority.

Elevated building*: Elevated building means a non-basement building (i) built, in the case of a building in Zones AE, A, A99, AO, AH, X, and D, to have the top of the elevated floor, elevated above the ground level by means of pilings, columns (posts and piers), or shear walls parallel to the floor of the water and (ii) adequately anchored so as not to impair the structural integrity of the building during a flood of up to the magnitude of the base flood. In the case of Zones AE, A, A99, AO, AH, X, D, "elevated building" also includes a building elevated by means of fill or solid foundation perimeter walls with openings sufficient to facilitate the unimpeded movement of flood waters.

Erodible soils*: Soils rated as Austin Silty Clay, bracket clay loam, Brackett-Austin complex (Austin only), Gullied land, Houston clay, Houston-Sumter clays, Houston Black clay, Houston Black gravelly clay, San Antonio clay loam, Venus loam, Venus clay loam, Webb fine sandy loam, Webb soils in the Soil Survey.

Existing construction*: For the purposes of determining rates, structures for which the "start of construction " commenced before the effective date of the FIRM or before January 1, 1975, for FIRMs effective before the date. "Existing construction" may also be referred to as "existing structures."

Existing manufactured home park or subdivision*: A manufactured home park or subdivision for which the construction of facilities for servicing the lots on which the manufactured homes are to be affixed (including, at a minimum, the installation of utilities, the construction of streets, and either final site grading or the pouring of concrete pads) is completed before the effective date of the floodplain management regulations adopted by a community.

Filtration basin*: Filtration basins are secondary treatment structures that follow sedimentation basins and release storm water runoff through a filter media to remove additional pollutants.

First flush*: At least the first one-half (½) inch of runoff from a storm event which flushes off and contains a disproportionately large loading of the accumulated pollutants from impervious and non-impervious surfaces.

Flood fringe*: That portion of the floodplain outside of the floodway.

Flood insurance rate map (FIRM)*: Flood rate insurance map (FIRM) means an official map of a community, on which the Federal Emergency Management Agency has delineated both the areas of special flood hazards and the risk premium zones applicable to the community.

Flood insurance study*: The official report provided by the Federal Emergency Management Agency. The report contains flood profiles, water surface elevation or the base flood, as well as the flood boundary map.

Flood or flooding*: Flood or flooding means a general and temporary condition of partial or complete inundation of normally dry land areas from:

1) The overflow of inland or tidal waters.

2) The unusual and rapid accumulation of runoff of surface waters from any source.

Floodplain*: Any land area susceptible to being inundated by water from any source (see definition of flooding). The 100-year floodplain is also known as the area of special flood hazard.

Floodplain, 100-year*: See 1% annual chance floodplain.

Floodplain management*: The operation of an overall program of corrective and preventive measures for reducing flood damage, including but not limited to emergency preparedness plans, flood control works and floodplain management regulations.

Floodplain management regulations*: Zoning ordinances, subdivision regulations, bonding codes, health regulations, special purpose ordinances (such as a floodplain ordinance, grading ordinance and erosion control ordinance) and other applications or police power. The term describes such state or local regulations, in any combination thereof, which provide standards for the purpose of flood damage prevention and reduction.

Floodplain standards or floodplain ordinance*: See Appendix F, Floodplains.

Flood proofing*: Any combination of structural and non-structural additions, changes, or adjustments to structures which reduce or eliminate flood damage to real estate or improved real property, water and sanitary facilities, structures and their contents.

Flood protection system*: Those physical structural works for which funds have been authorized, appropriated, and expended and which have been constructed specifically to modify flooding in order to reduce the extent or the areas within a community subject to a "special flood hazard" and the extent or the depths or associated flooding. Such a system typically includes hurricane tidal barriers, dams, reservoirs, levees or dikes. These specialized flood modifying works are those constructed in conformance with sound engineering standards.

Floodway*: The channel or a river or other watercourse and the adjacent land areas that must be reserved in order to discharge the base flood. The floodway is the 100-year floodplain in the City of San Antonio.

Freeboard*: Freeboard is a factor of safety usually expressed in feet above a flood level for purposes of storm water management. "Freeboard" tends to compensate for the many unknown factors that could contribute to flood heights greater than the height calculated for a selected size flood and floodway conditions, such as wave action, bridge openings, and the hydrological effect of urbanization of the watershed.

Green infrastructure or nature-based storm water management: Incorporates both the natural environment and engineered systems as an effective approach to storm water management that protects, restores, or mimics the natural water cycle and enhances community safety and quality of life. (https://www.americanrivers.org/threats-solutions/clean-water/green-infrastructure/what-is-green-infrastructure/)

Highest adjacent grade*: The highest natural elevation of the ground surface, prior to construction, next to the proposed walls of a structure.

Impervious*: See impervious cover.

Impervious cover*: Roads, parking areas, buildings, pools, patios, sheds, driveways, private sidewalks, and other impermeable construction covering the natural land surface; this shall include, but not [be]

limited to, all streets and pavement within the subdivision. "Percent impervious cover" is calculated as the area of impervious cover within a lot, tract, or parcel or within the total site being developed, divided by the total area within the perimeter of such lot, tract, parcel or development. Vegetated water quality basins, vegetated swales, other vegetated conveyances for overland drainage, and public sidewalks shall not be calculated as impervious cover.

Infrastructure*: Any physical system or facility that provides essential services such as transportation, utilities, energy, telecommunications, waste disposal, park lands, sports, buildings, housing facilities and the management and use of resources regarding the same. Infrastructure includes drainage systems, irrigation systems, sidewalks, roadways, drain systems, water systems, driveways, trails, parking lots, and other physical systems or facilities as generally described above that may not be specifically enumerated in this definition.

Intermediate floodplain*: Any channel, creek, stream, branch, or watercourse for surface water drainage that drains an area greater than three hundred twenty (320) acres but less than six hundred forty (640) acres.

Intermittent stream*: A stream that flows only during wet periods of the year (or thirty (30) to ninety (90) percent of the time) and flows in a continuous, well-defined channel.

Levee*: A manmade structure, usually an earthen embankment, designed and constructed in accordance with sound engineering practices to contain, control, or divert the flow of water so as to provide protection from temporary flooding.

LOMR*: A letter of map revision. A LOMR will be submitted for FEMA approval for all changes to the floodplain boundary that are delineated on the current flood insurance rate maps.

Lot, 900 series*: These lots specifically exclude the construction of all residential and nonresidential structures. The series is designed to allow for designation of permeable or impermeable open space and may include but not be limited to parkland required by section 35-503, storm water management facilities, water quality ponds, driveways, gazebos, playgrounds, private streets, utility easements and private ingress/egress easements.

Lowest floor*: The lowest floor of the lowest enclosed area (including basement). An unfinished or flood resistant enclosure, usable solely for parking or vehicles, building access or storage in an area other than a basement area is not considered a building's lowest floor; provided that such enclosure is not built so as to render the structure in violation of the applicable non-elevation design requirement of Section 60.3 of the National Flood Insurance Program regulations.

Low risk flood area*: Low risk flood area as used in section 35-F145 refers to the River Bend area of the San Antonio Riverwalk. For floodplain management purposes, low risk flood areas are defined as either the areas outside the one (1) percent annual chance floodplain and inside the 0.2 percent annual chance floodplain or areas of shallow flooding.

Major floodplain*: Any channel, creek, stream, branch, or watercourse for surface water drainage that drains six hundred forty (640) acres or more.

Manufactured home or manufactured housing*: A HUD-Code manufactured home. For purposes of the floodplain ordinance, a "manufactured home" means a structure transportable in one (1) or more sections, which is built on a permanent chassis and is designed for use with or without a permanent foundation when connected to the required utilities. The term "manufactured home" does not include a "recreational vehicle".

Manufactured home park or subdivision*: For purposes of the floodplain ordinance, a parcel (or contiguous parcels) of land divided into two (2) or more manufactured home lots for rent or sale.

Mean sea level*: For purposes of the National Flood Insurance Program, the National Geodetic Vertical Datum (NGVD) of 1929 or other datum, to which base flood elevations shown on a community's flood insurance rate map are referenced.

Minor floodplain*: Any channel, creek, stream, branch, or watercourse for surface water drainage that drains an area greater than one hundred (100) acres but less than three hundred twenty (320) acres.

Natural waterway: A waterway that results from implementation of management practices that allow for adequate conveyance of storm water (stream discharge), optimize plant and wildlife diversity, and maintain high water quality within the waterway while promoting a natural riparian environment.

Net area*: Mean total acreage within a master development plan less the area within the 100-year floodplain and the area dedicated to conservation easement, natural area (such as greenbelt) and parks.

New construction*: For the purpose of determining insurance rates, structures for which the "start of construction" commenced on or after the effective date of an initial FIRM or after December 31, 1974, whichever is later, and includes any subsequent improvements to such structures. For floodplain management purposes, "new construction" means structures for which the "start of construction" commenced on or after the effective date of a floodplain management regulation adopted by a community and includes any subsequent improvements to such structures.

New manufactured home park or subdivision*: A manufactured home park or subdivision for which the construction of facilities for servicing the lots on which the manufactured homes are to be affixed (including at a minimum, the installation of utilities, the construction of streets, and either final site grading or the pouring of concrete pads) is completed on or after the effective date of floodplain management regulations adopted by a community.

Overland flow*: Storm water runoff that is not confined by any natural or manmade channel such as a creek, drainage ditch, storm drain, or the like. Also known as "sheet flow", this involves the movement of runoff in a thin layer (usually less than one (1) inch in depth) over a wide surface, which begins when water ponded on the surface of the land becomes deep enough to overcome surface retention forces.

Pervious pavement*: A pavement system with traditional strength characteristics, but which allows rainfall to percolate through it rather than running off. A permeable pavement system utilizes either porous asphalt, pervious concrete, or plastic pavers interlaid in a running bond pattern and either pinned or interlocked in place. Porous asphalt consists of an open graded course aggregate held together by asphalt with sufficient interconnected voids to provide a high rate of permeability. Pervious concrete is a discontinuous mixture of Portland cement, coarse aggregate, admixtures, and water which allow for passage of runoff and air. Examples of permeable pavement systems include Grasspave2®, Gravelpave2®, Turfstone®, and UNI Eco-stone®. (See Watershed Management Institute, Inc. and U.S. Environmental Protection Agency, Office of Water, Operation, Maintenance and Management of Storm Water Management (Aug. 1997), at 2-32; Booth and Leavitt, Field Evaluation of Permeable Pavement Systems for Improved Storm Water Management, 65 J. Am. Planning Ass'n 314 (Summer 1999), at 314-325.

Public right-of-way*: A strip of land acquired by reservation, dedication, forced dedication, prescription, or condemnation and used or intended to be used, wholly or in part, as a public street, alley, walkway, drain or public utility line.

Public right-of-way (2)*: An area or strip of land, either public or private, occupied or intended to be occupied by a street, walkway, railroad, utility line, drainage channel, or other similar uses.

Redevelopment: Any new development to already developed real estate.

Regional Detention Facility: A detention facility accepting flow from an area exceeding three hundred twenty (320) acres.

Regional storm water improvements (RSI)*: Means regional detention and retention ponds, watershed protection, land purchase, waterway enlargement, channelization, and improved conveyance structures.

Regulatory Flood Event: A flood event that has a one (1) percent or greater chance of flooding in any given year assuming ultimate development has occurred throughout the watershed.

Regulatory floodplain*: The land within the community subject to a one (1) percent or greater chance of flooding in any given year assuming ultimate development has occurred throughout the watershed. For the purposes of this section the regulatory floodplain is limited to the reach of the stream which is designated as an area of special flood hazard on the currently effective FEMA Flood Insurance Rate Maps (FIRM Panels). NOTE: As the city's floodplain ordinance (Appendix F of the Unified Development Code) is approved by FEMA as a condition of participation in the National Flood Insurance Program (NFIP), the city's regulatory floodplain is considered FEMA's regulatory floodplain. (note: to be consistent with Appendix F, section 106)

Repetitive loss. Flood-related damages sustained by a structure on two (2) separate occasions during a ten-year period for which the cost of repairs at the time of each such flood event, on the average, equals or exceeds twenty-five (25) percent of the market value of the structure before the damage occurred.

Reservation, reserve, or reserve strip*: Any division of property that:

(a) Prohibits or interferes with the orderly extension of streets, bicycle or pedestrian ways, sanitary drain water mains, storm water facilities or other utilities or improvements between two abutting properties; or

(b) Plats an area so as to leave an undevelopable or unmarketable strip of land less than two hundred seventy (270) feet deep off of an arterial right-of-way that could otherwise circumvent construction and dedication requirements.

Right-of-way*: Property that is publicly owned or upon which a governmental entity has an express or implied property interest (e.g. fee title, easement, etc.) held for a public purpose. Examples of such public purpose include, by way of example and not limitation, a highway, a street, sidewalks, drainage facilities, drainage and water facilities.

Riparian areas: Riparian areas are lands that occur along watercourses and water bodies. Typical examples include flood plains and streambanks. They are distinctly different from surrounding lands because of unique soil and vegetation characteristics that are strongly influenced by the presence of water. https://www.nrcs.usda.gov/wps/portal/nrcs/detail/national/technical/?cid=nrcs143_014199

Sedimentation basins*: Sedimentation basins remove pollutants by creating conditions under which suspended solids can settle out of the water column.

Sheet flow*: See Overland flow.

Shrub, large*. An upright plant growing to a mature height of more than ten (10) feet for use a natural ornamentation or screening.

Shrub, medium*. An upright plant growing to a mature height of five (5) to ten (10) feet.

Shrub, small*. An upright plant growing to a mature height of less than five (5) feet.

Start of construction*: Start of construction means for all new construction and substantial improvements, the date the building permit was issued, provided the actual start of construction, repair, reconstruction, placement, or other improvement was within one hundred eighty (180) days of the permit date. The actual start means either the first placement of permanent construction of a structure on a site, such as the pouring of slab or footings, the installation of piles, the construction of columns, or any work beyond the stage of excavation for a foundation; or the placement of manufactured home on a foundation. Permanent construction includes land preparation, such as clearing, grading and filling; includes the installation of streets and/or walkways; excavation for a basement, footings, piers, or

foundations or the erection of temporary forms; the installation on the property of accessory buildings, such as garages or sheds not occupied as dwelling units or not part of the main structure. The start of construction period is valid for one hundred eighty (180) days. Any delay beyond this period would require resubmission of added data and the permit application.

Storm water drainage fees*: A method or mix of methods for providing adequate, stable and equitable funding for a comprehensive storm water or drainage program. The financing mechanisms included in the method may include, but not be limited to, user fees, new development impact fees, or surcharges on other utility fees.

Streamside management zone (SMZ)*: A streamside management zone (SMZ) includes forested buffers adjacent to streams or bodies of water, including intermittent and perennial streams, river, lake, slough, pond, creek, reservoir, watershed, or wetland (ephemeral streams are excluded). The minimum width of an SMZ on each side and above the head of streams or adjacent to bodies of water shall be fifty (50) feet from each bank. The total SMZ width includes average stream channel width plus buffer width.

Street, private*: Any street not dedicated to the public and to be maintained by a private entity. Informal maintenance or improvements performed by the city, such as the utilization of waste material to temporarily maintain or improve a private street, do not constitute an acceptance of ownership or obligation by the city.

Substantial damage*: Damage of any origin sustained by a structure whereby the cost of restoring the structure to its before damaged condition would equal or exceed fifty (50) percent of the market value of the structure before the damage occurred. Substantial damage also means flood-related damages sustained by a structure on two (2) separate occasions during a ten-year period for which the cost of repairs at the time of each such flood event, on the average, equals or exceeds twenty-five (25) percent of the market value of the structure before the damage occurred.

Substantial improvement*: Any reconstruction, rehabilitation, addition, or other improvement of a structure, the cost of which equals or exceeds fifty (50) percent of the market value of the structure before "start of construction" of the improvement. This includes structures which have incurred "repetitive loss" or "substantial damage", regardless of the actual repair work performed. The term does not, however, include either: (1) Any project for improvement of a structure to correct existing violations of state or local health, sanitary, or safety code specifications which have been identified by the local code enforcement official and which are the minimum necessary conditions or (2) Any alteration of a "historic structure", provided that the alteration will not preclude the structure's continued designation as a "historic structure."

Substantial rehabilitation*: Certified improvements to a historic building in which the cost of the project is equal to or greater than fifty (50) percent of the appraised pre-rehabilitation improvement value of the property and which constitutes major work on enhancing existing mechanical or structural systems that preserve the historical integrity, while extending the life of the building.

Swale*: A low lying or depressed stretch of land without a defined channel or tributaries.

Top of bank*: For purposes of determining river improvement overlay riverside setbacks in section 35-673, the point, stage or elevation at which water overflows the natural or man made banks of the river; alternately, the vertical point along the river where an abrupt change in slope is evident, and where the water level is generally able to overflow the natural bank or man made edge and enter adjacent floodplains (if any) during flows at or exceeding the average annual high water stage.

Understory*: Assemblages of natural low level woody, herbaceous and ground cover species.

Unflooded access*: Means that vehicular traffic has safe access to a property from a public street in times of flood (regulatory 100-year flood). A property will be considered to have unflooded access to an existing street if flow depths for access on the street adjacent to the property do not exceed one (1) foot and fall within the safe range on Figure 4.3.1C "Dangerous Conditions on Crossing During Floods."

Violation*: For purposes of the floodplain ordinance, the failure of a structure or other development to be fully compliant with the community's floodplain management regulations. A structure or other development without the elevation certificate, other certifications, or other evidence of compliance required in this chapter is presumed to be in violation until such time as that documentation is provided.

Water surface elevation*: The height, in relation to the National Geodetic Vertical Datum (NGVD) of 1929 (or other datum, where specified), of floods of various magnitudes and frequencies in the floodplains of coastal or riverine areas.

Watercourse*: A natural or manmade channel through which storm water flows.

Watershed*: The area drained by a given stream, river, watercourse, or other body of water.

Wetland*: See Texas Natural Resources Code § 221.001.

[Commentary: this statute presently defines "wetland" as follows: "land that: (A) has a predominance of hydric soil; (B) is inundated or saturated by surface or groundwater at a frequency and duration sufficient to support a prevalence of hydrophytic vegetation typically adapted for life in saturated soil conditions; and (C) under normal circumstances does support a prevalence of that vegetation.

APPENDIX

APPENDIX A - CHECKLIST

A.1 - Storm Water Management Plan Checklist

To standardize the review process and minimize the time for approval by the city during review of the plat and construction drawings for a subdivision, a complete submittal regarding the analysis of existing drainage conditions and the design of modifications or new drainage facilities is necessary. The owner of the property to be developed is required by the Director of TCI to provide, at the owner's expense and as a condition of construction plan approval, a storm water management report for the total development area to be ultimately constructed. The storm water management report shall contain all of the necessary support data, methodologies used in calculations, and conclusions. The checklist below will be used by the city reviewer as a guide during the evaluation of all storm water management reports submitted to the city. The purpose of the checklist is to expedite the review process for both the engineer and the city, and to aid the engineer in the preparation of reports for the city's review. The storm water management report shall be submitted to the Director of TCI through the director of planning and development services prior to approval of any construction plans.

CITY OF SAN ANTONIO
TRANSPORTATION & CAPITAL IMPROVEMENTS
STORM WATER ENGINEERING REVIEW TEAM
SUBMITTAL REVIEW CHECKLIST / COMMENTS

Date: _____	Engr. of Record: _____
Project: _____	Contact Name: _____
Type / City ID No.: _____	Phone Number: _____
Design Firm: _____	email: _____
REVIEWER: _____	QA/QC: _____
Phone Number: _____	Team Leader: _____
Email: _____	SWE ID: _____

SUBMITTAL TYPE	SUBMITTED / REVIEWED
☐ Major Plat ☐ Minor Plat	☐ I. Storm Water Management Plan (SWMP)
☐ MDP/ MPCD ☐ PUD	☐ II. Construction Plans ☐ III. Plat
☐ Building Permit ☐ RIO Zoning	☐ IV. Floodplain Analysis
☐ Low Impact Development (LID)	☐ CLOMR ☐ LOMR ☐ Other

To expedite review, please reference all City approved Plans, Plats, Building Permits or Floodplain Analyses associated with this development. Please provide as much information as available.

Parent Projects:	**NUMBER**	**NAME**	**DATE**	**Approved SWMP***
MDP (MPCD)+:	_____	_____	_____	☐
PUD+:	_____	_____	_____	☐
Plat:	_____	_____	_____	☐
Flood Study:	_____	_____	_____	☐
Building Permits:				
Site:	_____	_____	_____	☐
Foundation:	_____	_____	_____	☐
Shell:	_____	_____	_____	☐

*Approved Storm Water Management Plan with included Adverse Impact Analysis. (Please note that further adverse impact analysis may be required.)

+ MDP = Master Development Plan, MPCD = Master Planned Community District, PUD = Planned Unit Development

For Resubmittals:

1. Please respond to each set of the comments with a cover letter. Concurrent reviews require separate resubmittal packages.
2. Submit one (1) signed/sealed copy and one (1) digital copy in the resubmittal package accompanied by original redlines if applicable.
3. Include certification that no changes or additions were made to plans or the report other than those addressing said comments. If other changes were made, please include a description of those changes.

		STAFF USE ONLY

I. Storm Water Management Plan (SWMP)	**N/A**	**Included**	**Complete**	**Incomplete**	**Comments**
A. GENERAL					
1. Signed, sealed & bound **Storm Water Management Plan (SWMP)** (one (1) hard copy and one (1) digital copy)					
2. **Introduction & Executive Summary** of existing conditions, proposed project, and methods used for analysis					
*3. **Adverse Impact Statement**: "The increased runoff resulting from proposed development will not produce a significant adverse impact to other properties, habitable structures or drainage infrastructure systems to a point 2,000 feet downstream. Downstream conditions (including actual curb depth) in this reach have been field verified by myself or members of my staff. Therefore, the owner requests to participate in the Regional Storm Water Management Program by paying a fee- in-lieu-of onsite detention."*					
4. **Regional Storm Water Management Program Participation Form**					
5. **Project Location Map**					
6. **Digital Flood Insurance Rate Map (DFIRM)** with site superimposed					
7. ***Grading Plan** (Also required in construction plans)*					
• *Lots grading properly according to FHA Lot Grading Type (A, B, C)*					

• *Driveway Detail, reference to critical Type "C" lots*					
• Check T-intersections, cul-de-sacs, and knuckles to make sure runoff is contained in streets					
• Interceptor channels are required when:					
◦ Offsite drainage area flowing onto site is greater than 3 acres, or					
◦ Offsite drainage area flowing onto site is greater than 2 average residential lot depths					
8. **Aerial map**					
• *To expedite review, delineate site boundaries, point 2,000 ft downstream, all downstream storm water facilities and other pertinent physiographic information.*					
9. **Onsite Drainage Area Map(s)** (to scale) for **Existing, Proposed, and Ultimate Conditions** :					
• *Show Time of Concentration (Tc) pathways*					
• *Show individual and overall drainage areas for the site. Indicate area of each watershed*					
• *Show computation points and points of discharge; Table of hydrologic calculations for each individual and cumulative drainage area and points of discharge. Include acreage, runoff coefficients, Tc values, and rainfall intensities for the 5, 25, & 100-yr storm events, as applicable.*					
10. ***Overall Drainage Area Map(s)*** *(to scale) for* ***Existing, Proposed*** *, and* ***Ultimate Conditions:***					
• *Include point 2,000 ft downstream (For lots less than three (3) acres in size adverse impact analysis*					

need only extend to where tributary drainage areas equal to 100 acres)					
• *Show Time of Concentration (Tc) pathways*					
• *Show individual and overall drainage areas for the site. Indicate area of each watershed*					
• *Show computation points and points of discharge*					
• *Table of hydrologic calculations for each individual and cumulative drainage area and points of discharge. Include acreage, runoff coefficients, Tc values, and rainfall intensities for the 5, 25, & 100-yr storm events, as applicable*					
11. **Impervious Cover Exhibit(s)** : Indicate existing and proposed impervious cover					
12. **Floodplain Submittal** is required if property is within, abutting, or adjacent to a floodplain, see Floodplain Section below.					
13. Verify if site is in a **Mandatory Detention Area**					
B. HYDROLOGY					
1. **Description of Method for Hydrologic Analysis Detailed runoff calculations include:**					
• Hydrologic Calculation Methods (Reference Chapter 5, Hydrology):					
• Rational Method: Drainage area ≤ 200 acres					
• Detailed Time of Concentration (Tc) calculations;					

• Weighted runoff coefficients; Rainfall intensities;					
• Peak flow for Q5, Q25, Q100					
◦ SCS or other Hydrograph Method allowed for drainage areas > 20 acres and required for drainage areas > 200 acres					
• Typical SCS programs used: HEC-HMS, Pond Pack, Hydraflow, XPStorm, etc.					
• Provide all electronic files					
• Detailed Time of Concentration/Lag Time calculations					
• SCS curve number (CN) value: provide detailed calculations & Soil Survey Map or Geotechnical Report to support					
◦ Soil Survey Map of area (site delineated, soil type & acreage of each soil group)					
• % Impervious Cover detailed calculations and exhibit					
• Verify rainfall depths					
• Routing Values: Provide detailed calculations (types of routing are Modified Puls or Muskingam Cunge)					
◦ Verify Reach lengths for routing and velocities					
2. **Table comparing the Existing, Proposed, & Ultimate Condition Peak Flows (5, 25 and 100yr)**					

C. HYDRAULICS					
1. **General:**					
• Storm water infrastructure for drainage areas < 100 ac, design for the Q25					
• For all storm water facilities with drainage area ≥ 100ac, design for Q100					
2. **Street Capacity:**					
• Local 'A': Q5 contained within top of curb, Q25 contained within ROW					
• Collector/Local 'B': Q25 contained within top of curb					
• Primary/Secondary Arterial: Q25 contained within top of curb & one lane in each direction shall remain passable with a flow depth not to exceed 0.3 ft					
• For drainage area > 100 acres, Q100 contained within top of curb. Use actual curb heights in calculations for existing streets (non-standard curbs, street overlays, etc.)					
3. **Dead end street draining to unpaved surface:**					
• Runoff velocity < 6 fps.					
• Ensure runoff will flow into drainage easement					
4. **Storm Drain:**					
• Inlets designed for 25 yr capacity					

• HGL/EGL: provide detailed calcs (including junction losses). Show on S.D. profiles					
• EGL: below top of curb and top of junction box or, if approved by City, specify bolted manhole covers.					
• HGL: below gutter					
• Min easement: 15 ft min or 6 ft from pipe limits					
• Minimum Pipe Slope: 0.3%					
• Minimum Cleaning Velocity: 3 fps for 5-yr (20% ac) storm					
• Maximum Permissible Velocity:					
◦ Maximum Velocity for Trunk lines: 15 fps					
◦ Maximum Velocity for Laterals: No limit					
• Slopes or velocities outside the allowable range may require additional certifications at permitting or final inspection and/or additional warranties.					
• Reinforce Concrete Pipe required under public streets					
• Pipe Diameter					
◦ Trunk Lines: Minimum 24 in diameter					
◦ Laterals and driveway crossings: < 24 in diameter may be allowed on a case-by-case basis					
5. **Channels:** (provide detailed calculations)					
• If Drainage area < 100ac : Contain W.S. for Q25 plus freeboard (see Table 9.3.14)					

• If Drainage area ≥ 100ac : Contain W.S. for Q100 or Q25 plus freeboard, whichever is greater					
• Channel bend freeboard calculations (if centerline radius is < 3 times the bottom width)					
• Verify if the channel has adequate drainage easement					
• Include a channel maintenance schedule for new channels					
• Verify Manning's Roughness Coefficient (n) (Reference Table 9.2.4.1)					
• Earthen channel:					
◦ Verify 15 ft access easement on one side					
◦ Max 6 fps except as shown in Table 9.3.8					
◦ Pilot channel required if slope < 0.5%					
◦ Maximum 3:1 side slopes					
• Concrete channel:					
◦ Verify 15 ft access easement on one side, 2 ft easement on the other					
◦ Minimum longitudinal slope: 0.4% or 0.1% with minimum cleaning velocity of 3 fps for existing Q5					
◦ For trapezoidal channels, maximum 1.5:1 side slope without geotech design					
◦ Handrails or fencing required for channels with vertical walls or side slopes > 2:1 when wall height exceeds 2 ft					

◦ Check outfall velocities					
• Side-Lot Flumes:					
◦ Public Easements: verify 10 ft access easement on one side, 2 ft easement on the other					
◦ Private Easements: verify 2 ft easement on either side					
◦ Slope and velocity requirements are the same as for concrete channels.					
• Turf Reinforcement Matting: 6 fps < V < 12 fps. If > 12 fps, engineer's report should certify that material is appropriate for velocity. Include manufacturer specs & installation instructions. Engineer to certify at final inspection that material was installed correctly.					
• Interceptor channel: Drainage easement shall extend a min of 2 ft on both sides of the channel					
• Handrails or fencing required on vertical headwalls greater than 2 ft in height and wing walls with slopes steeper than 2:1					
6. **Outfalls / Outlets / Transitions**					
• When one channel discharges into another channel verify that storm water will be contained within the receiving channel. Verify that the outfall velocity into the receiving channel will not result in runoff jumping out of the receiving channel.					
• Concrete rip rap or other velocity control/erosion protection measures may be required at pipe/channel and channel/channel intersections and transitions.					

• If outfall velocity exceeds 6 fps at transition to earthen channel or other non-paved surface, provide energy dissipators or other velocity control measures					
◦ Verify that the proposed energy dissipator type is appropriate for the outfall conditions (Reference Chapter 10, Table 10.4.3)					
◦ Detailed calculations are required when energy dissipators are proposed					
◦ Provide retard spacing and concrete transition length where applicable					
• Hydrograph timing & analysis of backwater may affect outfall and dissipator calculations					
D. ADVERSE IMPACT ANALYSIS					
1. **Narrative**					
• Provide an Adverse Impact Analysis and an Adverse Impact Statement					
• Discuss in detail the downstream conditions					
• Discuss if drainage patterns have changed from the previously approved MDP, if applicable					
2. **If site work permit ONLY with no increase in impervious cover -** Demonstrate that drainage patterns are not obstructed. Grading plan required. Detailed adverse impact analysis may be required.					
3. **Provide detailed hydrologic & hydraulic calculations from proposed development to 2,000 ft downstream**					

• Verify hydrologic calculation method					
• Compare existing, proposed, and ultimate peak flows					
• Reference Checklist Section B					
4. **Street Capacity:**					
• Local 'A': Q5 contained within top of curb, Q25 contained within ROW					
• Collector/Local 'B': Q25 contained within top of curb					
• Primary/Secondary Arterial: Q25 contained within top of curb & one lane in each direction shall remain passable with a flow depth not to exceed 0.3 ft					
• For drainage area > 100 acres, Q100 contained within top of curb. Use actual curb heights in calculations for existing streets (non-standard curbs, street overlays, etc.)					
• Velocity < 10 fps					
5. **Curb Inlets:**					
• Opening capacity detailed calculations for Q25					
• HGL/EGL: provide detailed calcs (including junction losses).					
• EGL: below top of curb					
• HGL: below gutter line					
6. **Storm Drain:**					

• HGL/EGL: provide detailed calcs (show losses). Show on storm drain profiles.					
• EGL: should be below junction box lid/manhole					
7. **Channels: (provide detailed calculations for Ultimate Q & Channel Capacity):**					
• Contain ultimate Q25 plus freeboard or ultimate Q100, whichever is greater, within drainage easement/ROW & does not flood habitable structures.					
8. **Culvert:**					
• Runoff should not overtop an existing structure under the roadway for the existing, proposed, and ultimate of the 5, 25, & 100 yr condition **OR** &hellip					
• A new culvert should be designed for the 25 yr ultimate for drainage areas ≤ 100 acres or 100-year for drainage areas greater than 100 acres					
9. **Low Water Crossings** (Provide detailed calculations and discuss):					
• Low Water Crossing must not be classified as "Dangerous" during regulatory (5, 25, or 100 yr frequency) storm events					
• If the WSE exceeds this criterion the crossing may be improved in lieu of providing onsite mitigation measures or paying a fee-in-lieu of detention. This is to be considered on a case-by-case basis and may require a developer agreement.					
10. **Underground Utilities in Floodplain:**					

• Provide buoyancy and scour calculations for the 5, 25, and 100 yr storm events					
• Show any required concrete capping or encasement in construction plans					
E. DETENTION					
1. **Provide Drainage Area Map(s)** (to scale) for **Existing and Proposed Conditions:**					
• Also include ultimate conditions, if applicable (phased construction, basin serving multiple lows, etc.)					
• Include Time of Concentration/Lag time flow paths					
• Modified Rational Method may be used for drainage areas up to 20 acres					
• SCS Method to be used for drainage areas > 20 acres (i.e. HEC-HMS, Pond Pak, Hydraflow, etc.)					
• SCS Method to be used for modeling multiple ponds, regardless of drainage area					
2. **Provide results in tabular format with detailed calculations for allowable/existing, proposed, and ultimate discharges from the structure**					
3. **Post-development discharges** from the pond for the 5, 25, and 100 yr must be equal to or less than existing conditions					
4. Provide inflow and **outflow hydrographs** for 5, 25, and 100 yr (proposed, ultimate)					

5. *Provide**required storage**for the 5, 25, and 100 yr (proposed, ultimate)*					
6. **Include stage vs. discharge and stage vs. storage tables**					
7. **Provide outlet rating curve**					
8. **Provide Pondpack, Hydraflow Hydrographs, or other applicable calculation files on CD**					
9. **Verify if pond qualifies as a TCEQ dam.** (Reference Chapter 13 for dam requirements)					
10. **Verify basin side slopes:**					
• Maximum 3:1 for earthen berm/side slopes					
• Concrete side slopes/walls may require structural details or geotech analysis depending on slope and height (see concrete channel wall requirements)					
11. **Check hydraulics of outlet structure:**					
• Verify weir and orifice size(s) and elevation(s)					
• Check effect of tail water elevation on outfall hydraulics					
• Outfall velocity: maximum 6 fps (sandy soils may require a discharge velocity less than 6 fps)					
• Provide energy dissipation if needed (include calculations and construction details)					
12. **Verify design water surface elevations are below the top of pond:**					

• 100 yr proposed/ultimate or 25 yr proposed/ultimate plus freeboard					
• If TCEQ dam, provide auxiliary spillway					
13. **Restrictor plates** may be required for ponds with phased development					
14. **Provide pond grading on subdivision plat**					
15. **Provide detention pond construction plans** (signed & sealed), including but not limited to:					
• Pond grading					
• Notes for establishing vegetation					
• Pond details, including cross-sections with design water surface elevations					
• Outfall structure (pipe, weir, etc.) details					
• Restrictor plate details, as applicable					
16. **Deferred Detention:**					
• Detailed detention analysis and construction of ponds may be allowed on a case by case basis					
• Preliminary detention calculations are still required at platting					
17. **Regional Storm Water Detention Facilities** :					
• Provide 15 ft easement around top of bank and/or 100 yr flood inundation pool for maintenance [and public safety] purposes					
18. **Public Detention Facilities:**					

• Provide access ramps with a maximum slope of 7:1 for access to the flow line of the facility (also recommended for private facilities)					
19. **Provide a signed Maintenance Agreement**					
20. **Drainage Easements for Detention Ponds:**					
• Show detention pond easements on the plat when the detention is being designed and constructed as part of the plat					
• Detention pond easements generally shall not be provided on the plat when detention is deferred					
21. **Detention Pond Conformance Letter:**					
• Submit letter to TCI after pond is constructed					
• Plat recordation, building permit approval, or certificate of occupancy may be withheld until letter is submitted by applicant and accepted by TCI					
• Plat recordation will not be withheld when deferring detention					
F. OTHER					

			STAFF USE ONLY		
II. CONSTRUCTION PLANS Refer to Standard Details and Design Guidance Manual	**N/A**	**Included**	**Complete**	**Incomplete**	**Comments**
A. STREET PLANS					
1. **Signed and sealed Construction Plans**					
• Submit one (1) hard copy and one (1) digital copy with original submittal and resubmittals;					
• Once the plans are approved, additional hard copies of the plans may be requested for distribution to the City inspectors.					
2. **Slope to inlet:** min = 0.5% ; max = 4%					
• Positive drainage provided to all inlets, including those located at the low point of (i.e. in the sag of) a vertical curve					
3. **Provide flow arrow for washout crowns**					
4. **Provide flow arrows and detailed grading at T-intersections, cul-de-sacs, and knuckles** as needed to make sure runoff is contained in streets					
B. DRAINAGE PLANS					
1. **Signed and sealed Construction Plans**					
• Submit one (1) hard copy and one (1) digital copy with original submittal and resubmittals;					

• Once the plans are approved, additional hard copies of the plans may be requested for distribution to the City inspectors.					
2. **Standard notes:**					
• Improved earthen channels and detention ponds will be vegetated by seeding or siding. Eighty five percent (85%) of the channel surface area must have established vegetation before the City of San Antonio will accept the channel for maintenance					
• All concrete lining shall develop a min. compressive strength of 3,000 psi in 28 days					
• For normal conditions, the concrete lining shall be a minimum of five (5) inches thick and reinforced with **No. 4 round bars @ 18 inches on center each way or welded wire fabric of 6" x 6" - W/D6 x W/D6.** Where surcharge, nature of ground, height and steepness of slope, etc. become critical, design shall be in accordance with latest structural standards. All concrete lining shall develop a minimum compressive strength of not less than three thousand (3,000) pounds per square inch in twenty eight (28) days. The depth of all toe downs shall be 36 inches upstream, 24 inches downstream, and 18 inches for side slopes. The City's Construction Inspector may permit an 18" toe down in rock sub grade in lieu of the above toe down requirements. The horizontal dimensions of toe downs shall not be less than six (6) inches.					
3. **Storm Drain:**					
• Minimum easement required (15 ft) or 6 ft from extreme limits of pipe					

• Minimum 2' vertical/horizontal clearance between storm drain pipes and other utilities, or provide concrete encasement					
4. **Junction box:**					
• Minimum 6 in clearance from O.D. of pipe to inside of junction box wall					
• Invert of junction box to be shaped with concrete fill (2,500 psi min) to ensure drainage to outlet pipe					
C. STANDARD DETAIL SHEETS					
1. **Junction Box:**					
• Check for standard junction box detail					
• If proposed span larger than standard, reinforcement and concrete wall thickness calculations and a signed and sealed detail must be provided					
2. **Curb inlets** shall be per City standard details. Inlet extensions are acceptable as follows:					
• Maximum of one (1) extension allowed for inlets on grade					
• Inlet extensions are typically not allowed for sump inlets					
• If proposing multiple extensions on grade or extensions for sump inlets, additional capacity calculations or non-standard detailed drawings may be required					
3. **Pipe Bedding and Backfill Details** *(See special detail)*					

• Note on 2nd layer (Rocks not larger than 1 in)					
4. **Provide concrete collars at all tie-ins**					
5. **Grout should be added to spring line**					
6. **Weep Holes** :					
• Required in rip rap and on headwalls 5 ft and higher					
• Place weep holes 6" above the toe at 10 ft o.c.					
• Geo-fabric is to be placed behind the riprap to hold the gravel (1 cubic foot per weep hole)					
D. UTILITY LAYOUT					
1. **Lateral tie-ins** from properties to public storm drain systems					
• Laterals < 24 in may be approved on a case by case basis					
2. **Utilities in the Floodplain** :					
• Check if any proposed underground utility lines are in floodplain					
• Buoyancy and scour calculations may be required					
• Concrete capping or encasement may be required					
E. GRADING PLAN					
1. **Grading Plan:**					

• Lots grading properly according to FHA Lot Grading Type (A, B, C)					
• Driveway Detail, reference to critical Type "C" lots					
• Check T-intersections, cul-de-sacs, and knuckles to make sure runoff is contained in streets					
• Interceptor channels are required when:					
◦ Offsite drainage area flowing onto site is greater than 3 acres, or					
◦ Offsite drainage area flowing onto site is greater than 2 average residential lot depths					
F. OTHER					

		STAFF USE ONLY

III. PLAT	N/A	Included	Complete	Incomplete	Comments
A. GENERAL					
1. Provide one (1) hard copy and one (1) digital copy of the **Subdivision Plat**					
2. **Existing Contours**					
3. **Finished/proposed Contours:**					
• Street only if no significant site grading					
• Provide detention pond contours on plat, unless detention is deferred					
3. **Label & dimension all drainage easements**					
• Public easements: ≥ 100 acre drainage area or conveying runoff from public ROW or facilities; and/or containing FEMA floodplain					
• Private easements: <100 acre drainage area and/or not conveying runoff from public ROW or facilities, except for some side-lot flumes					
• Side-lot flumes: 10 ft access required for public easements; minimum 2 ft either side of channel for private easements					
4. **Verify continuation of Streets & Channels**					
5. **Delineate DFIRM 100 Yr Floodplain**					
• Provide drainage easement to include the worst case of the FEMA 100 yr and the lesser of the					

Ultimate 100 yr or the Ultimate 25 yr plus freeboard floodplain or a combination thereof					
6. **NOTE:** Temporary easement to expire upon incorporation into platted public street ROW.					
7. **NOTE:** No structures, fences, walls, or other obstructions that impede drainage shall be placed within the limits of the drainage easements shown on this plat. No landscaping or other type of modifications, which alter the cross-sections of the drainage easements, as approved, shall be allowed without the approval of the Director of TCI. The City of San Antonio and Bexar County shall have the right of ingress and egress over grantor's adjacent property to remove any impeding obstructions placed within the limits of said drainage easement and to make any modifications or improvements within said drainage easements.					
8. **NOTE** : Finish floor elevations must be a minimum of (8) inches above final adjacent grade (for residential lots only).					
9. **NOTE:** Minimum finished floor elevations for residential and commercial lots shall be elevated at least one (1) foot higher than the computed water surface elevation for the 100 year ultimate development.					
10. **NOTE** : The maintenance of the detention pond and outlet structure shall be the responsibility of the lot owners or home owners association their successors or assignees and not the responsibility of the City of San Antonio and or Bexar County.					
11. To expedite the review of elevation certificates, indicate the specific minimum finish					

floor elevation for all lots adjacent to FEMA floodplains.					
12. **Deferred Detention** : Areas within the City Limits.					
• Provide NOTE: Storm water detention is required for this property. Building permits for this property shall be issued only in conjunction with necessary storm water detention approved by the City of San Antonio. The property may be eligible to post a fee-in-lieu-of onsite detention (FILO) if offsite drainage conditions allow but only when approved by the City of San Antonio. Maintenance of onsite storm water detention shall be the sole responsibility of the lot owners and/or property owners association and their successors or assignees.					
• Provide preliminary calculations of estimated detention basin size.					
13. **Easement Requirements:**					
• Easements will be required for all detention facilities accepting runoff from properties other than the lot on which the detention pond exists or will be constructed. When detention is deferred, in lieu of providing an easement on the plat, TCI may require that a note be placed on the plat specifying which lot(s) will provide detention for other lots. TCI may require that an easement be established by separate instrument at building permit.					
• For regional detention facilities the easement shall extend to a minimum of fifteen feet outside both the 100 yr pool and the structural improvements to facilitate maintenance as well as public safety.					

B. OTHER					

			STAFF USE ONLY		
IV. FLOODPLAIN SUBMITTAL	**N/A**	**Included**	**Complete**	**Incomplete**	**Comments**
A. COSA FLOODPLAIN STUDY					
1. **Provide one (1) hard copy and one (1) digital copy of signed and sealed floodplain study.**					
2. **Narrative:**					
• Table of Contents and abstract or executive summary					
• Introduction that includes project description and history, location, scope and objective of analysis, previous and related studies that may affect this analysis					

• Summary, conclusions, and recommendations. Include the impact on the floodplain's Q, WSEL & velocity.					
3. **Provide analysis of the following:**					
• 25 yr existing and ultimate development plus required freeboard condition hydrologic and hydraulic analyses					
• 100 yr existing and ultimate development condition hydrologic and hydraulic analyses					
4. **Vicinity map**					
5. ***Overall Aerial Drainage Area Map(s)*** *(signed and sealed):*					
• Show Time of Concentration (Tc) pathways					
• Show individual and overall drainage areas. Indicate area of each watershed					
• Show computation points and points of discharge					
• Show runoff coefficients and impervious cover percentage					
6. **Topographic Work Map(s)** (signed and sealed):					
• ?Existing conditions work map; showing existing contours, plan view of project limits, effective/existing cross sections, effective floodplain limits, property lines, etc.					
• Proposed conditions work map; showing the existing and proposed contours where necessary, proposed cross sections, project limits, property					

lines, revised floodplain limits with drainage easements, etc.					
7. **Grading Plan** (existing and finished contours) signed and sealed					
8. **Channel Cross Sections** (existing superimposed on proposed) show the drainage easement, Manning's coefficients, property lines, structures, etc.)					
9. **Plotted water surface profiles for the ultimate flows (if applicable)**					
10. **Easement for Floodplain**					
• Provide drainage easement to include the worst case of the FEMA 100 yr (1% annual chance) and the lesser of the Ultimate 100 yr or the Ultimate 25 yr plus freeboard floodplain or a combination thereof					
• Drainage easements that include FEMA floodplain shall be noted as public easements on plats and other easement documents					
11. **Provide detailed Hydrology calculations** , see checklist Section I.B.					
12. **Channel outfalls perpendicular to the floodplain:**					
• Channel outfall must be taken to the invert of the floodplain or show the velocity to be less than 6 fps going down the side slope.					
• 36 in toe-down required.					
• Floodplain development permit is required if within the city limits					

13. **Provide a summary table (or tables) of the hydraulic model**					
14. **CD of all HEC-HMS, HEC-RAS, XP-SWMM, and/or other models used in analyses**					
15. Is this development over the **Edwards Aquifer Recharge Zone?**					
16. **Flood plain Development Permit Application** (1 copy)					
17. **Elevation Certificates** (if applicable)					
18. **Unflooded vehicular access** must be available to the development from a public street.					
19. **If site is in ETJ, Bexar County is the Floodplain administrator**					
• COSA Floodplain Development Permit is not required					
• Coordinate necessary forms and submittal requirements with the County					
• Bexar County signs the FEMA forms					
• Verify drainage easement for ultimate conditions					
20. **Contour Data:**					
• If using agency provided 2 ft aerial contours or 1 ft Lidar contours, field verification is required					
21. **Floodplain Reclamation:**					
• Account for storage volume lost (with comparable excavation within the same creek					

floodplain) when reclamation of ineffective flow OR shallow flooding (overbank) areas is proposed					
• If more than 320 acres drain to site, improvements to site may require an administrative exception					
22. **Master Development Plans (MDP):**					
• Provide hydraulic analysis of floodplains that are adjacent to this MDP or if no hydraulic study is being done provide the following note on the MDP with signatures of the Owner and Engineer: "The Floodplain limits on this Master Development Plan are estimated and subject to change. Approval of subdivision plats associated with this Master Development Plan is subject to the review and approval of a Storm Water Management Plan in accordance with the City of San Antonio Unified Development Code."					
• **Note that MDPs are conceptual in nature and ONLY conditional approvals shall be given. One condition is that at the time of platting, more detailed downstream analysis will be provided by the engineer.**					
B. FEMA CLOMR / LOMR					
1. **Provide the applicable items listed in the COSA Floodplain Study above**					
2. **MT-2 Form 1, Sec D:**					
• Provide Owners and Engineer's original signature					
3. **MT-2 Form 2, Sec A:**					

• Provide an attached explanation if sediment transport is not considered					
4. **MT-2 Form 2, Sec B.4:**					
• Model names in this section must match the models listed in the CD					
5. ***Detailed Map Revision Study:***					
• Include 10, 50, 100 and 500 yr analyses					
6. If applicable, provide **As-Built Grading Plan** with engineer's seal and signature.					
7. Recommend providing **Check-RAS output**					
8. **Provide models for effective, corrected effective, proposed, and ultimate (future) conditions**					
9. **Provide existing and proposed FEMA DFIRM Maps with the following:**					
• Existing - Label Map "Effective" and show the site boundaries					
• Proposed - Label Map "Revised/ Proposed", show site boundaries, show only the proposed floodplain limits, floodplain must tie in with the existing floodplain upstream and downstream, show the proposed streets centerline only and label, show the upstream and downstream limits of study					
10. Verify that **Environmental Site Assessment (ESA)** has been submitted (COSA will not review)					
C. OTHER					

			STAFF USE ONLY		
V. OTHER COMMENTS	**N/A**	**Included**	**Complete**	**Incomplete**	**Comments**

APPENDIX B - MISSOURI CHARTS

This Appendix presents methods and charts for determining pressure changes at inlets, square and round junction boxes (manholes) on storm drain systems flowing full. The following instructions and charts are from the University of Missouri Engineering Bulletin No. 41 "Pressure Changes at Storm Drain Junctions"

The University of Missouri Engineering Bulletin No. 41 "Pressure Changes at Storm Drain Junctions" was the results of flume model testing.

Figure B.2 Chart 2 through Figure B.7 Chart 7 each dealt with a rectangular inlet box admitting grate flow and having a specific arrangement of pipelines. Figure B.8 Chart 8 through Figure B.10 Chart 10, supplemented by Figure B.3 Chart 3, apply to square and round manholes with various pipeline arrangements but with no flow admitted through the top of the junction structure. Since no one chart presents a complete solution for manholes, the following explanation of methods for the determination of pressure changes is divided into sections relating to the particular configuration instead of into sections relating to each chart, as was done in the case of inlets.

Pressure change coefficients are presented in Figure B.3 Chart 3 for use in determining the elevation of the pressure line of an in-line pipe upstream from a manhole with through flow only. The pressure change coefficient is controlled primarily by the relative diameters of the upstream and outfall pipes, and secondarily by the distance across the open manhole if the outfall pipe entrance is square-edged. Rounding the outfall entrance eliminates the effects of manhole size relative to the pipe and reduces the coefficients to a limited degree. Manhole cross-section shape is not significant. Thus, the values of Figure B.3 Chart 3 apply equally to round, square, or rectangular manholes. Shaping of the bottom of a manhole

to continue a portion of the lower sector of the pipe cross-section through from pipe to pipe is ineffective in reducing losses.

The nomenclature used for all manhole types is given in Figure B.1 Chart 1.

B.1 - General Instructions for use of Design Charts

Several operations are common to use of the design charts for various types of junctions. Instructions for performing these recurring procedures are consolidated in the following General Instructions. In the detailed instructions for use of the individual charts, references to these General Instructions are made by number (Gen. Instr. 1, etc.). The General Instructions follow.

1. Determine and tabulate the elevation of the outfall pipe pressure line at the branch point or inlet center (refer to Figure B.1 Chart 1).

   This elevation is obtained by adding to the elevation of the pressure line at the preceding structure downstream the pipe friction loss

   (Equation B.1a)

$$h_f = LS_f$$

   h_f = friction loss (ft.)
   L = length from center to center of structures (ft.)
   S_f = friction (or resistance) loss per ft. at the given rate of flow for the given pipe flowing full.

2. Calculate the mean velocity head of the flow in the outfall pipe.

   (Equation B.1b)

$$h_v = \frac{V_o^2}{2g} = \frac{1}{2g}\left(\frac{Q}{Area}\right)^2$$

   h_v = velocity head (ft.)
   g = acceleration of gravity = 32.2 ft./sec ^{2}.
   Q = rate of flow in pipe flowing full (cfs)
   Area = Area of pipe = 0.7854 D ^{2} (ft ^{2})
   D = pipe diameter (ft.)

3. Calculate the required flow rate and size ratios.

Examples: Q_U/Q_O, Q_L/Q_O, Q_G/Q_O, etc.
D_U/D_O, D_L/D_O, B/D_O, etc.

4. Estimate the depth of water in a rectangular inlet with flow into the inlet from a top grate, either alone or combining with flow from an upstream pipe.

   d = total depth of water (ft.)

   = (outfall pressure line elevation minus inlet bottom elevation) $+K\frac{V_o^2}{2g}$

   K = the pressure change coefficient for the inlet water depth (This is estimated as detailed for each type of inlet. Such estimates are not necessary for inlets with in-line or off-set opposed laterals.)

5. Use the coefficients K from the charts for inlets and junctions with square-edged entrance to the outfall pipe (entrance flush with box side, with sharp edges).

6. Use reduced coefficients K, where applicable, for a rounded entrance to the outfall pipe (rounded on ¼ circle arc of approximate radius $^1/_8 D_O$) or for an entrance formed by the socket end of a standard tongue-and-groove concrete pipe.

   Figure B.2 Chart 2-insignificant effect; make no reduction.

   Figure B.3 Chart 3-read directly from chart.

   Figure B.4 Chart 4-reduce K_U by 0.1 for usual proportions of grate flow; by 0.2 for Q_G about 0.5 Q_o.

   Figure B.5 Chart 5-reduce K_U and K_L in same manner as Chart 4.
   Figure B.6 Chart 6-insignificant effect; make no reduction.
   Figure B.7 Chart 7-insignificant effect; make no reduction.
   Figure B.8 Chart 8 , Figure B.9 Chart 9, and Figure B.10 Chart 10-see specific instructions for each case.

7. Calculate pressure change.

   To calculate the change of pressure at a junction, working upstream from the outfall pipe to an upstream pipe, the design chart applying to the type of junction involved is selected. The pressure change coefficient for a specific upstream pipe is read from the chart for the particular flow rate and size ratios already calculated. The pressure change is calculated from

   (Equation B.1c)

   $$\mathbf{h = K\frac{V_o^2}{2g}}$$

   The coefficient is a dimensionless number, and therefore, the change of pressure will be in feet.

8. Apply the pressure change.

   The pressure change, in feet, for each upstream pipe is added to the outfall pipe pressure line elevation at the branch point to obtain the elevation of each pressure line for further calculations upstream along that pipe. In some cases the upstream pressure line at the branch point will be at a lower elevation than the downstream pressure line. Where this less common situation may occur with a particular type of junction, it is mentioned in the instructions for use of the specific chart.

9. Determine the elevation of the water surface.

   The elevation of the water surface in a junction or an inlet (with or without grate flow) receiving flow from a pipe or pipes will correspond to that of the upstream in-line pipe pressure line. At a junction with offset opposed laterals, the water surface will correspond to the elevation of the far lateral pipe pressure line. At a junction with in-line opposed laterals, the water surface will correspond to the elevation of the pressure line of the higher-velocity lateral pipe.

Each of the inlet and junction types for which design charts were derived from the analytical and experimental investigation are now listed separately the chart number appropriate for each is stated, and detailed instructions are given for determination of the change of pressure through use of the chart.

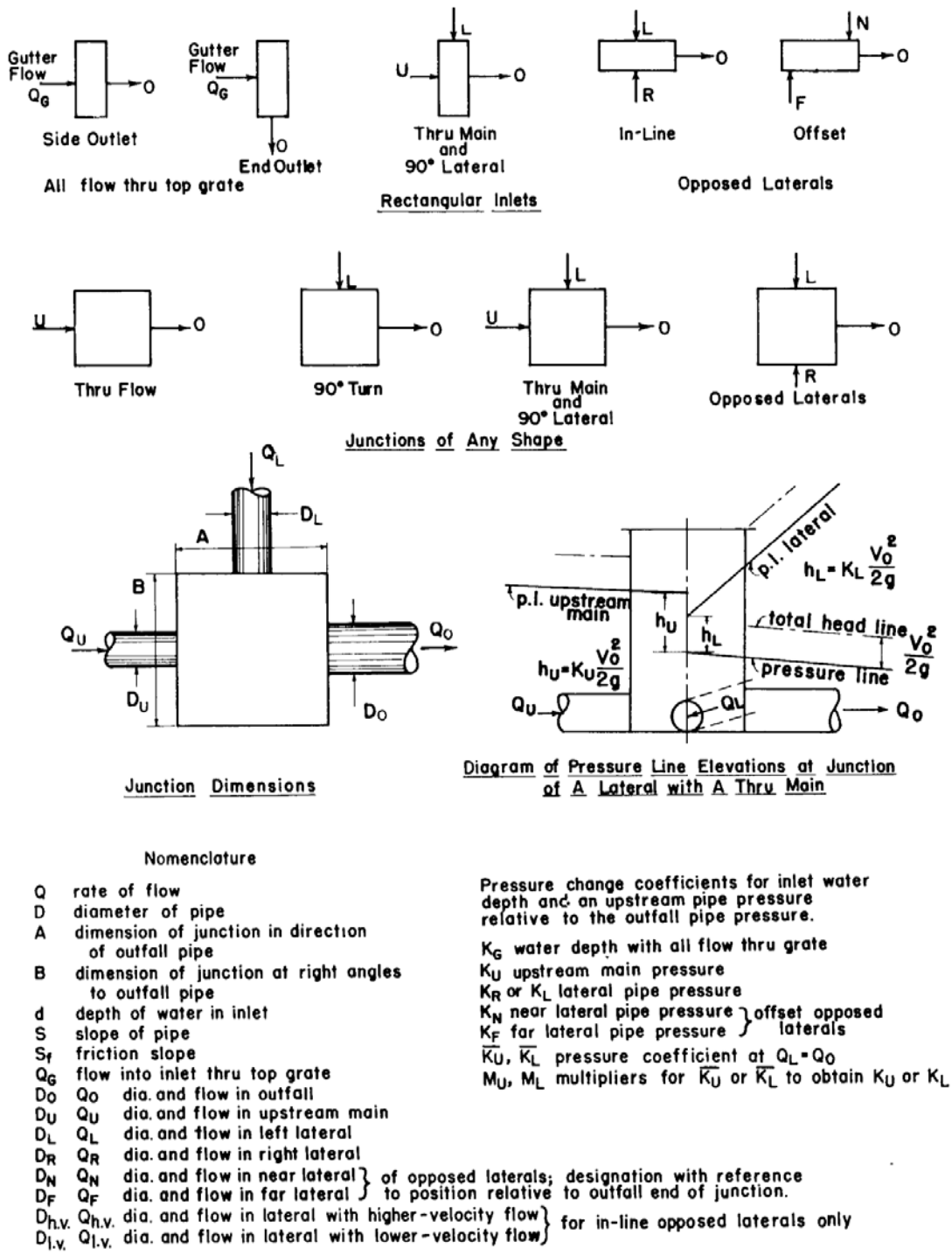

Figure B.1 Chart 1 - Manhole Junction Types & Nomenclature *(Source University of Missouri E.S.B. #41)*

B.2 - CHART 2 - Rectangular Inlet With Grate Flow Only

Pressure change coefficients are presented in this chart for use in determining the elevation of the water surface in a rectangular inlet with all inflow entering through a top grate. Separate curves are included for the outfall pipe connected at the box end (short dimension) and the box side (long dimension). The coefficient K_G depends on the pipe position and the depth of water in the inlet.

To use the chart:

1. Note whether outlet is at end or side.
2. Determine outfall pipe pressure line elevation - Gen. Instr. 1.
3. Calculate outfall velocity head - Gen. Instr. 2.
4. Estimate a value for water depth d.
   a. Outfall pressure line elevation minus inlet bottom elevation plus equals d. $K_E \frac{V_o^2}{2g}$
   b. Estimate K_G as follows:

      For pressure line to bottom, not over 2 pipe diameters

      i. 7.0 for end outlet
      ii. 5.0 for side outlet

      For higher pressure lines

      iii. 4.0 for end outlet
      iv. 3.0 for side outlet
5. Calculate the estimated relative water depth d/D_o.
6. Enter Figure B.2 Chart 2 at this depth d/D_O and read K_G from the curve for the particular outfall pipe location.
7. Calculate h_G as indicated on the diagram on the chart and by Gen. Instr. 7.
8. Add h_G to the elevation of the outfall pressure line at the inlet center to obtain the water surface elevation in the inlet.
9. From this water surface elevation subtract the elevation of the inlet bottom to obtain a more precise value for the water depth d.
10. Repeat the above procedure with the improved value of d from step (9), if necessary. Such repetition may not be necessary if the estimated d/D_O of step (5) was reasonable accurate.
11. Check to be sure the inlet water elevation is below the top of the inlet so that inflow may be admitted.

Note: The designer may consider the use of $K_G = 1.5$ and $K_E = 0.5$ for design instead of Chart 2. K_E is the entrance loss. The high values of K_G for curb inlet or grate is questionable.

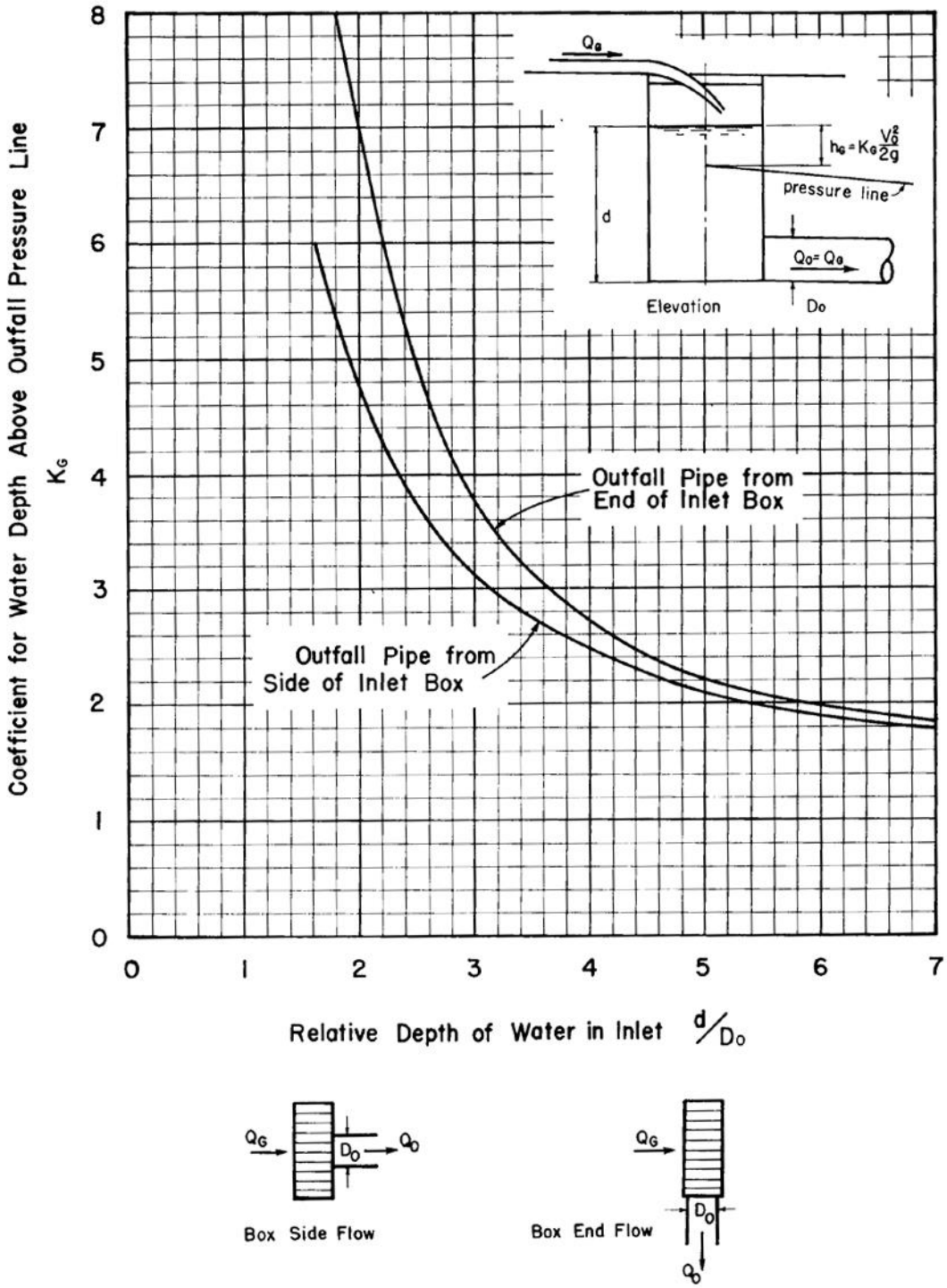

Figure B.2 Chart 2 - Rectangular inlet with grate flow only *(Source University of Missouri E.S.B. #41)*

B.3 - CHART 3 - Flow Straight Through Any Junction

Pressure change coefficients are presented in this chart for use in determining the elevation of the pressure line of an upstream in-line pipe relative to that of the outfall. The pipe centerlines must be parallel and not offset more than would permit the area of the smaller pipe to fall entirely within that of the

larger if projected across the junction box along the pipe axis. The shape of the junction in plan is not significant in determining the pressure change. The effects of junction size and outfall pipe entrance conditions are included in the chart. Negative pressure changes occur with an upstream pipe smaller than the outfall pipe. That is, at the junction center the upstream pressure line is below the outfall pressure line for this case. No flow other than that from the upstream in-line pipe may be involved where this chart applies.

To use the chart:

1. Determine the outfall pipe pressure line elevation - Gen. Instr. 1
2. Calculate the velocity head in the outfall - Gen. Instr. 2.
3. Calculate the size ratios D_U/D_O and A/D_O - Gen. Instr. 3.
4. Note whether the outfall pipe entrance is to be square-edged or rounded (note Gen. Instr. 6).
5. Enter Figure B.3 Chart 3 at the pipe size ratio D_U/D_O and read K_U at the curve for the proper value of A/D_U for a square-edged entrance condition, or at the dashed curve for a rounded entrance.
6. Calculate h_U (positive or negative) as indicated on the diagrams on the chart and by Gen. Instr. 7.
7. Add a positive h_U to (or subtract a negative h_U from) the elevation of the outfall pressure line at the junction center to obtain the elevation of the upstream pipe pressure line at the same location.
8. The water surface elevation in the junction corresponds to that of the upstream pipe, whether above or below the outfall pressure line.
9. Check to be sure the water surface elevation in the junction is below the top of the junction box so that overflow may not occur.

Comments: For a square-edged entrance to the outfall pipe, values of A/D_U less than 1 do not appreciably reduce the values of K_U shown for $A/D_U = 1$. K_U increases for distances A/D_U greater than 3, but such values are not usual in storm drain construction. For rounded entrances, the curve shown will apply with sufficient accuracy for all values of A/D_U up to 3.

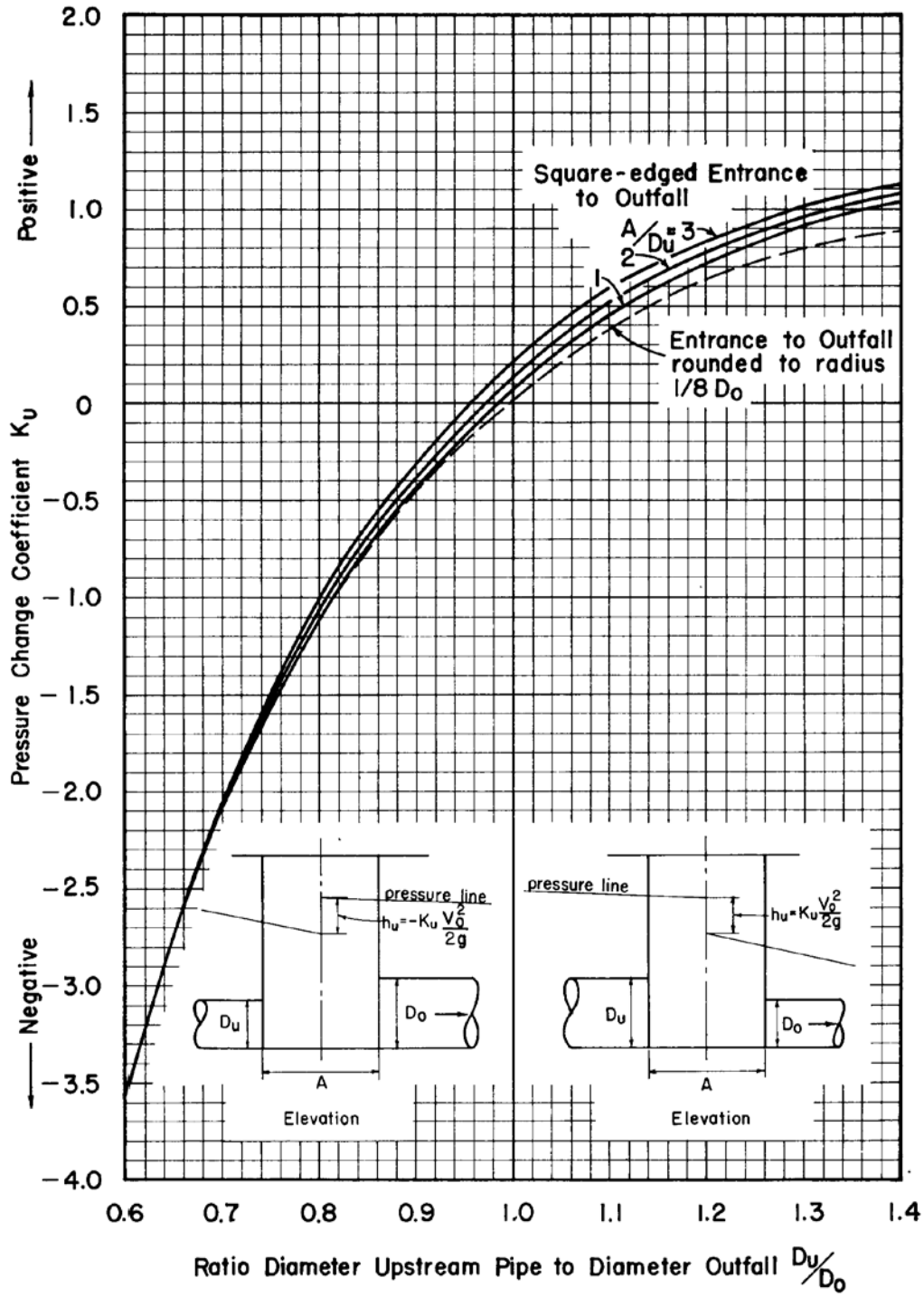

Figure B.3 Chart 3 - Flow Straight Through any Junction
(Source University of Missouri E.S.B. #41)

B.4 - CHART 4 - Rectangular Inlet With Through Pipeline and Grate Flow

Pressure change coefficients are presented in this chart for use in determining the common elevation of the upstream in-line pipe pressure line and the water surface in the inlet. The in-line pipes connect at the inlet sides (long dimension) and must meet the alignment requirement stated for Figure B.3 Chart 3. As much as half the total flow may enter through a top grate. The main graph of Figure B.4 Chart 4 includes

effects of various proportion of grate flow for a relative water depth d/D_O of 2.5. Increments of K_U for other relative depths are shown in the supplemental graphs; positive increments for d/D_O less than 2.5 and negative for greater depths.

To use the chart:

1. Determine the outfall pipe pressure line elevation - Gen. Instr. 1.
2. Calculate velocity head in the outfall - Gen. Instr. 2.
3. Calculate the ratios D_U/D_O and Q_U/Q_O - Gen. Instr. 3. (The grate flow ratio $Q_G/Q_O = 1 - Q_U/Q_O$).
4. Estimate a value for the water depth d.
    a. Follow Gen. Instr. 4.
    b. Estimate $K = 3\ Q_G/Q_O$.
5. Calculate the corresponding relative water depth d/D_O.
6. If the estimated d/D_O is approximately 2.5, enter the lower graph on Figure B.4 Chart 4 at the pipe size ratio D_U/D_O and read K_U at the curve or interpolated curve for Q_U/Q_O; Then proceed as in step (9).
7. If the estimated d/D_O is other than 2.5, follow step (6), then enter the upper graph on Figure B.4 Chart 4 at the given D_U/D_O and determine the increment of K_U required to account for the effects of the estimated relative water depth d/D_O.
8. Add K_U from step (6) and the increment from step (7) to determine the total value of K_U. Note that negative values of K_U may occur.
9. For a rounded outfall pipe entrance or one consisting of a pipe socket, reduce K_U, according to Gen. Instr. 6.
10. Calculate h_U as indicated on the diagram on the chart and by Gen. Instr. 7.
11. Add h_U, to the elevation of the outfall pressure line at the inlet center to obtain the elevation of the upstream in-line pipe pressure line at the same location. The water surface elevation will correspond.
12. From this water surface elevation subtract the elevation of the inlet bottom to obtain a more precise value for the water depth d.
13. Repeat the above procedure with the improved value of d from (12), if necessary. Such repetition may not be necessary if the original estimated d/D_O of step (5) was reasonably accurate.
14. Check to be sure the inlet water elevation is below the top of the inlet so that inflow may be admitted.

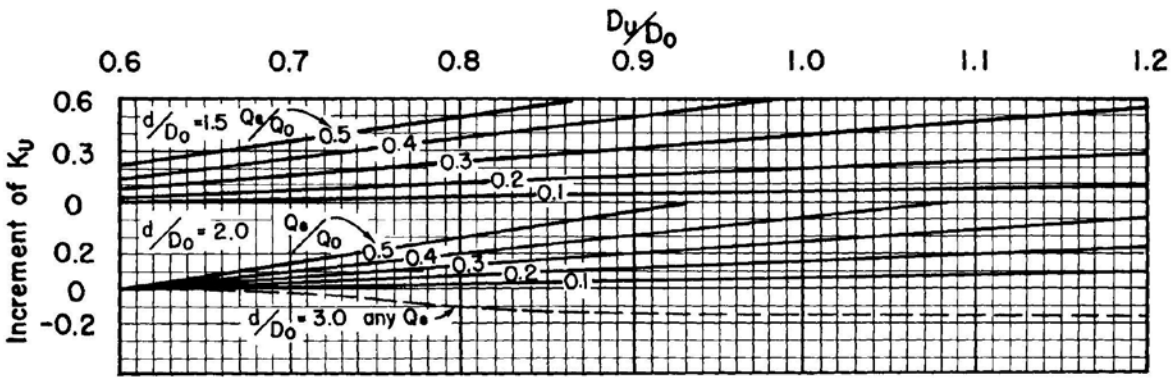

Supplementary Chart for Modification of K_U for Depth in Inlet other than 2.5 D_O

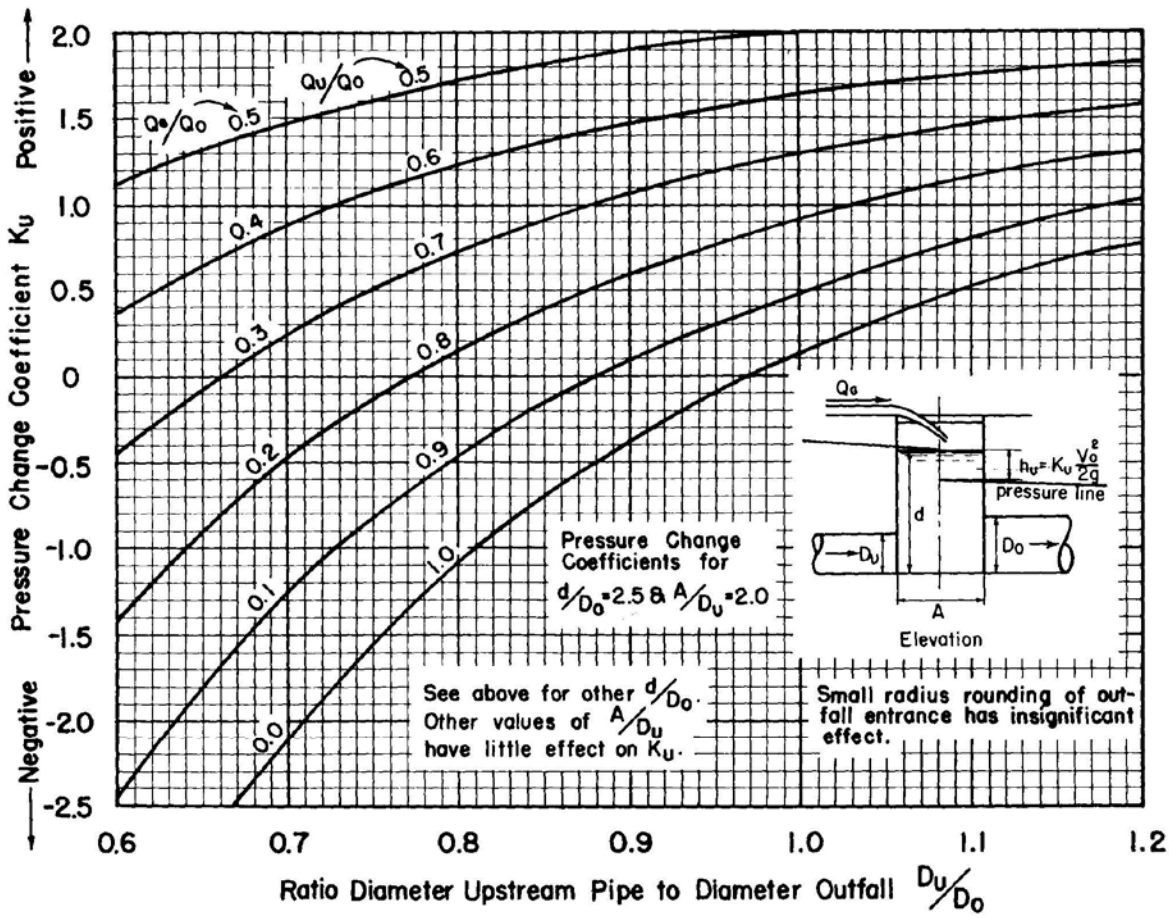

Figure B.4 Chart 4 - Rectangular Inlet With Through Pipeline And Grate Flow
(Source University of Missouri E.S.B. #41)

B.5 - CHART 5 - Rectangular Inlet With In-line Upstream Main and 90° Lateral Pipe (With or Without Grate Flow)

Pressure change coefficients are presented in this chart for use in determining the common elevation of the two upstream pipe pressure lines and the water surface in the inlet. Flow into the combination inlet

and junction box is supplied by an upstream main, in-line with the outfall and flowing through the short dimension of the inlet, and a 90° lateral pipe connected at one end of the inlet box, supplemented by flow through a top grate. The main graph of Figure B.5 Chart 5 applies directly for no flow into the inlet through the grate. Increments of K_U and K_L for grate flow conditions are shown in the supplementary graphs of the upper portion of the chart.

To use the chart:

1. Determine the outfall pipe pressure line elevation - Gen. Instr. 1.
2. Calculate the velocity head in the outfall - Gen. Instr. 2.
3. Calculate the ratios D_U/D_O, Q_U/Q_O, and Q_G/Q_O - Gen. Instr. 3.
4. If no grate flow is involved, enter the lower graph on Figure B.5 Chart 5 at the pipe size ratio D_U/D_O and read K_U (or K_L) at the curve or interpolated curve for Q_U/Q_O; then proceed as in step (10).
5. With grate flow, estimate a value for the water depth d.
   a. Follow Gen. Instr. 4.
   b. Estimate K = 1.5.
6. Calculate the corresponding relative water depth d/D_O.
7. Enter the lower graph and obtain K_U (or K_L) as in step (4), this value applying for Q_G/Q_O = O.
8. Enter the appropriate upper graph on Figure B.5 Chart 5, for the particular d/D_O nearest that estimated in step (6), at the given D_U,$/D_O$ and determine the increment of K_U (or K_L) at the curve for Q_G/Q_O. This increment accounts for the effects of grate flow and is always a positive value, even when K_U of step (7) is negative.
9. Add K_U from step (7) and the increment from step (8) to obtain the total value of K_U. Note that in unusual cases the total value of K_U may be negative.
10. For a rounded outfall pipe entrance or one consisting of a pipe socket, reduce K_U, and K_L according to Gen. Instr. 6.
11. Calculate h_U (also equal to h_L) as indicated by the diagram on the chart and by Gen. Instr. 7.
12. Add h_U to the elevation of the outfall pressure line at the branch point to obtain the elevation of the upstream in-line pipe pressure line at this point. The elevations of the lateral pipe pressure line and the water surface in the inlet will correspond.
13. From this water surface elevation subtract the elevation of the inlet bottom to obtain a more precise value for the water depth d.
14. Repeat the above procedure with the improved value of d from step (13), if necessary. Such repetition may not be necessary if the original estimated d/D_O of step (6) was reasonably accurate.
15. Check to be sure the inlet water surface elevation is below the top of the inlet so that inflow may be admitted.

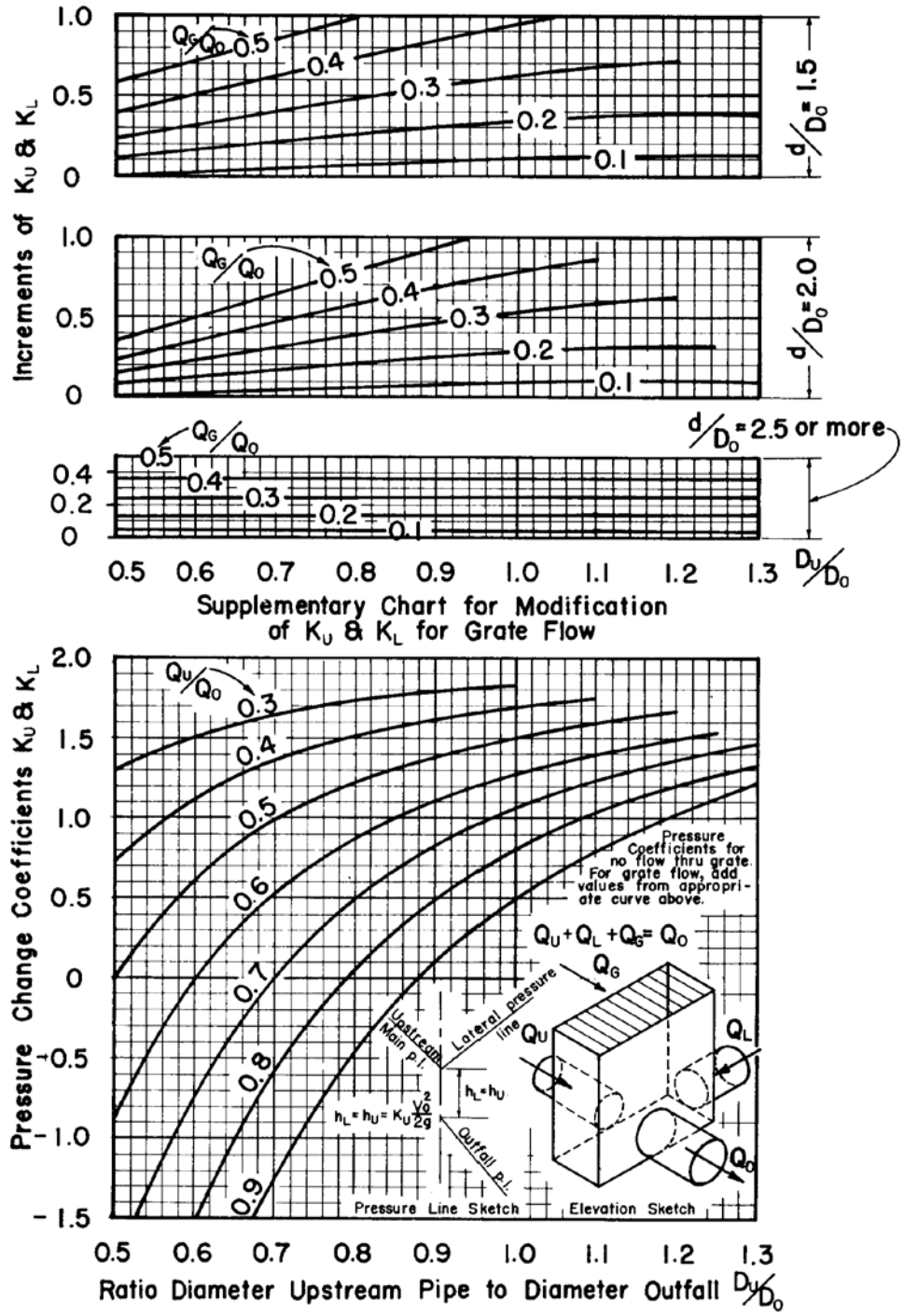

Figure B.5 Chart 5 - Rectangular Inlet With In-line Upstream Main And 90° Lateral Pipe (With or Without Grate Flow) *(Source University of Missouri E.S.B. #41)*

B.6 - CHART 6 - Rectangular Inlet With In-Line Opposed Lateral Pipes Each at 90° to Outfall (With or Without Grate Flow)

Pressure change coefficients are presented in this chart for use in determining the elevation of the pressure line of the lateral carrying the lower-velocity flow of two in-line opposed lateral pipes supplying a combination junction and inlet box. The pressure change coefficient for the higher-velocity lateral is a

constant and so is not read from the chart. An inlet of this type may be used at a low point of street grade where lateral pipes supply flow from up-grade inlets in both directions, and the outfall pipe is located at right angles to the two lateral lines.

The chart may be used for cases with all probable ratios of flow rates in the two laterals, with or without grate flow. For this type of inlet and junction, the pressure changes are not modified by the depth of water in the inlet. The water surface elevation here will correspond to the pressure line of the higher-velocity lateral.

To use the chart:

1. Determine the outfall pipe pressure line elevation - Gen. Instr. 1.
2. Calculate the velocity head in the outfall - Gen. Instr. 2.
3. Calculate the velocities in each of the laterals to determine which is the higher-velocity and which the lower-velocity lateral.
4. Calculate the ratios Q_G/Q_O, Q_{hv}/Q_O, Q_{lv}/Q_O, D_{hv}/D_O, D_{lv}/D_O and D_{hv}/D_{lv} - Gen. Instr. 3.
5. Determine H from the left-hand graph on Figure B.6 Chart 6. Enter the graph at the pipe size ratio D_{hv}/Do (note the two scales) and read H at the curve or interpolated curve for Q_{hv}/Q_O. In entering the graph, note that unequal size laterals (D_{hv}/D_{lv}, not equal to 1.0), effect an offset of the scale for D_{hv}/D_O. Interpolation between the two scales shown is used for intermediate values. Extrapolation beyond the scales is satisfactory.
6. Determine L from the right-hand graph on Figure B.6 Chart 6. Enter the graph at the pipe size ratio D_{lv}/D_O (note only one scale is involved) and read L at the curve or interpolated curve for Q_{lv}/Q_O.
7. Calculate $K_{lv} = H - L$ with grate flow involved. With no grate flow, $K_{lv} = (H - L) - 0.2$.
8. $K_{hv} = 1.8$ with grate flow involved. With no grate flow, $K_{hv} = 1.6$.
9. Calculate $h_{lv} = K_{lv}\frac{V^2}{2g}$ and $h_{hv} = K_{hv}\frac{V^2}{2g}$
10. Add h_{lv} to the elevation of the outfall pipe pressure line at the branch point to obtain the elevation of the lower-velocity lateral pressure line at this point; similarly, add h_{hv} to the outfall pipe pressure line elevation to obtain the elevation of the higher-velocity lateral pressure line at the branch point.
11. Determine the water surface elevation in the inlet, which is equal to the lower of the two lateral Pressure line elevations (that of the higher-velocity lateral).
12. Check to be sure the inlet water surface elevation is below the top of the inlet so that inflow may be admitted.

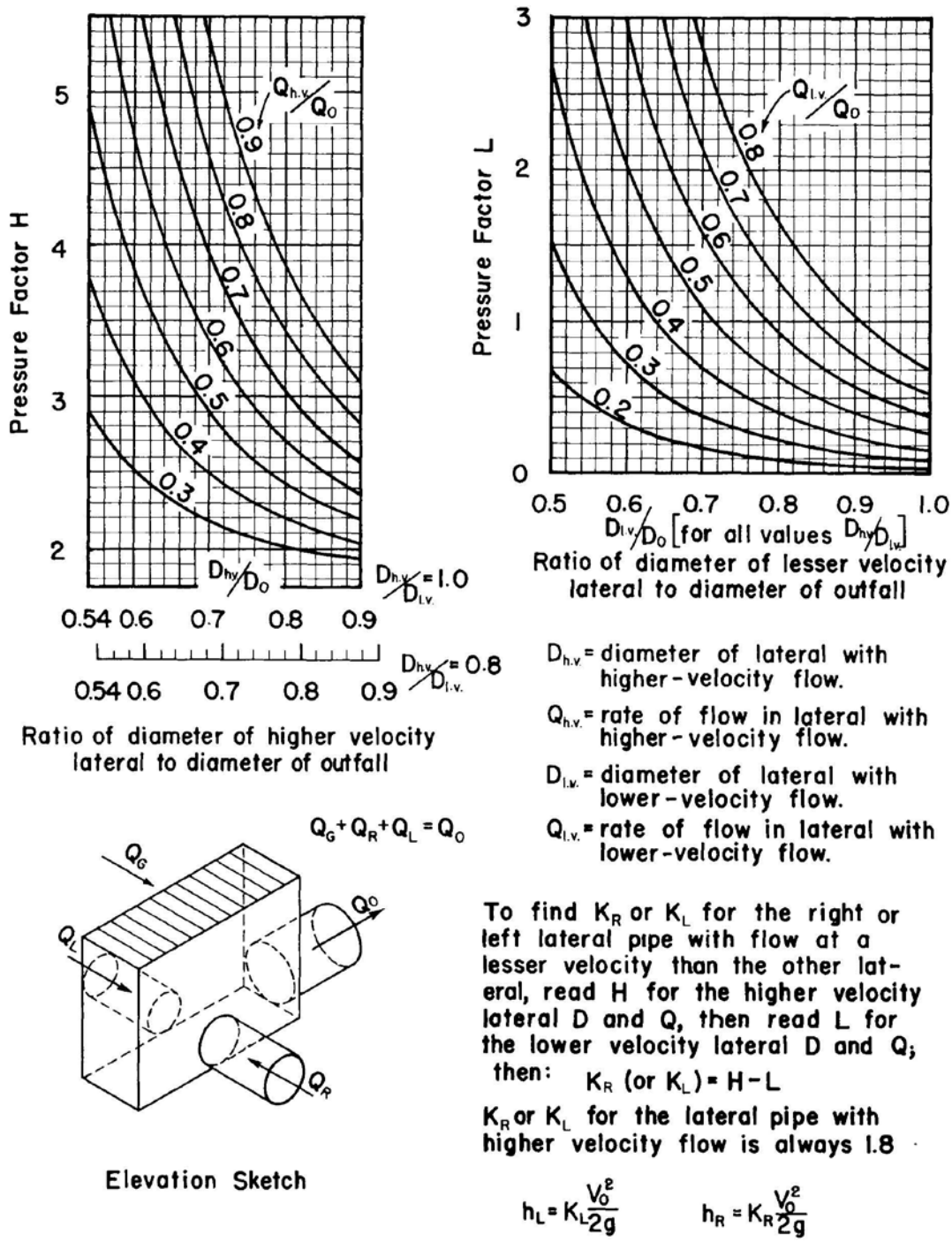

Figure B.6 Chart 6 - Rectangular Inlet With In-line Opposed Lateral Pipes Each at 90° To Outfall (With or Without Grate Flow) *(Source University of Missouri E.S.B. #41)*

B.7 - CHART 7 - Rectangular Inlet With Offset Opposed Lateral Pipes Each at 90° to Outfall (With or Without Grate Flow)

Pressure change coefficients are presented in this chart for use in determining the elevations of the pressure lines of each of the two horizontally offset opposed lateral pipes supplying a combination junction and inlet box. The inlet is used in the same situations as those to which Figure B.6 Chart 6

applies, but the pressure rise of the lower velocity lateral is restricted by locating the lateral pipes to enter opposite sides of the inlet box with their centerlines horizontally offset a distance not less than the sum of the two lateral pipe diameters. One lateral enters one side of the box near the outfall pipe end, and one, designated the far lateral, enters the opposite side near the other end.

This chart is used for all probable ratios of flow rates in the two laterals, with or without grate flow. For this type of inlet the pressure changes are not modified by the depth of water in the inlet. The water surface elevation here will correspond to the pressure line of the far lateral.

To use the chart:

1. Determine the horizontal distance between the centerlines of the opposed flow laterals at the inlet; if more than the sum of the pipe diameters, this chart will apply.
2. Determine the outfall pipe pressure line elevation at the branch points - Gen. Instr. 1. An average elevation applicable to both is sufficiently precise.
3. Calculate the velocity head in the outfall - Gen. Instr. 2.
4. Calculate the ratios Q_F/Q_O, Q_N/Q_O, D_F/D_O, and D_N/D_O, observing the nomenclature of Figure B.1 Chart 1- Gen. Instr. l.
5. Calculate the factors noting that the pipe size relations are the reciprocals of the usual ratios. $\left(\frac{Q_F}{Q_O}\right)\left(\frac{D_O}{D_F}\right)$ and $\left(\frac{Q_N}{Q_O}\right)\left(\frac{D_O}{D_N}\right)$
6. For the far lateral, enter the left-hand graph of Figure B.7 Chart 7 at the abscissa value from step (5) and read K_F at the curve or interpolated curve for D_F/D_O.
7. For the near lateral, obtain K_N, from the right hand graph by a similar procedure.
8. For an inlet with grate flow, calculate h_F and h_N by multiplying the outfall velocity head by the corresponding coefficient K_F or K_N.
9. For a junction without grate flow, calculate h_F and h_N by multiplying the outfall velocity head by the corresponding reduced coefficients (K_F - 0.2) or (K_N - 0.2).
10. Add h_F and h_N to the elevation of the downstream (outfall pipe) pressure line to obtain the elevations of the pressure lines of the two laterals at their branch points.
11. Determine the water surface elevation in the inlet, which is equal to the far lateral pressure line elevation.
12. Check to be sure the inlet water surface elevation is below the top of the inlet so that inflow may be admitted.

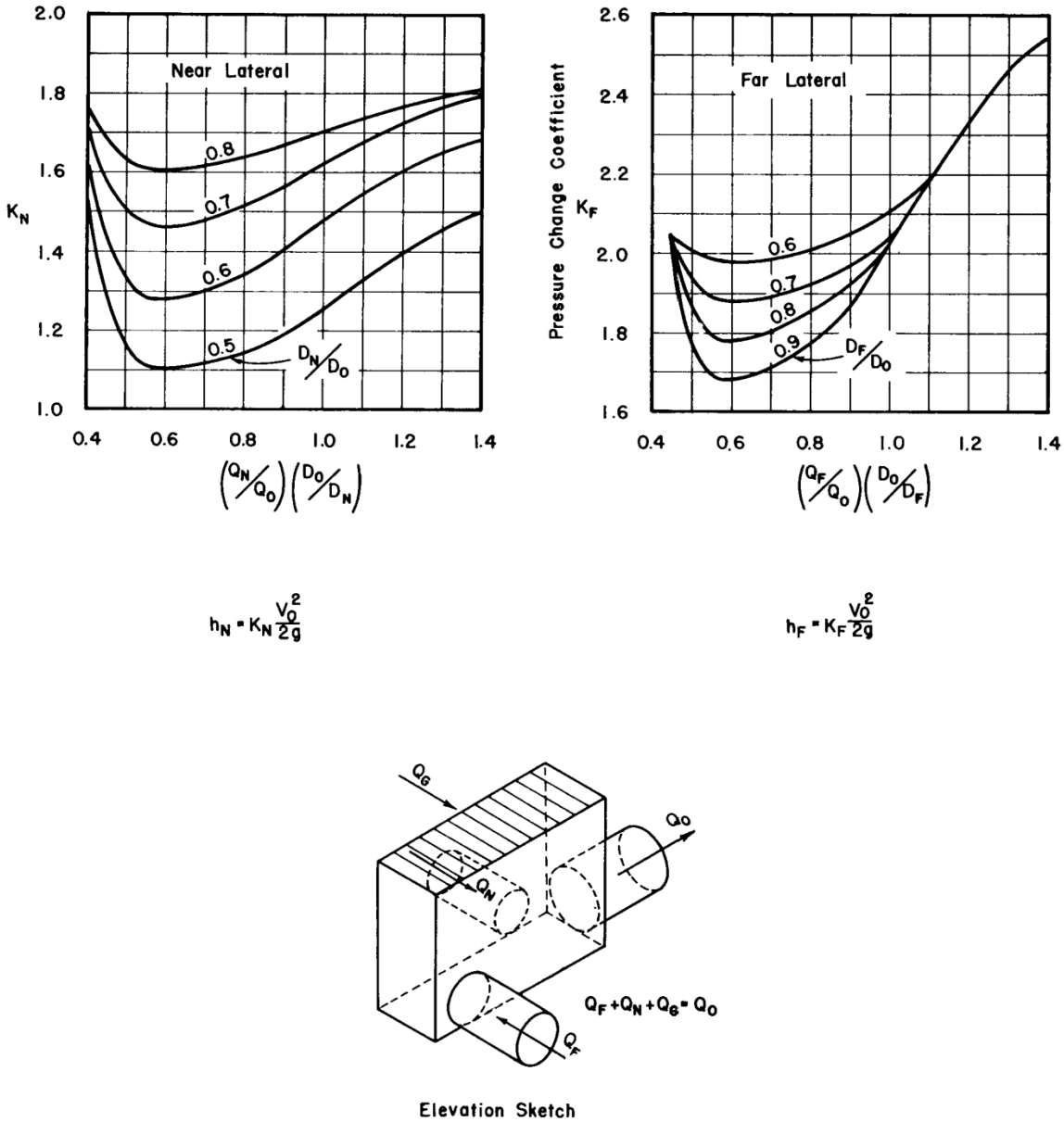

Figure B.7 Chart 7 - Rectangular Inlet With Offset Opposed Lateral Pipes each at 90° To Outfall (With Or Without Grate Flow) *(Source University of Missouri E.S.B. #41)*

B.8 - CHART 8 - Junction Box (manhole) 90° Deflection - Lateral Coefficient

A. **Square Manhole at 90° Deflection - Figure B.8 Chart 8**

Pressure change coefficients are presented in this chart for use in determining the elevation of the pressure line of an upstream pipe connected by means of a square manhole to an outfall pipe at a 90° angle. The manhole conditions covered by this chart do not involve an upstream pipe in-line with the outfall pipe. For this and other manhole charts, the lateral pipe is designated by the subscript L irrespective of its right-hand or left-hand position. The coefficients given by the chart apply directly to manholes having a square-edged entrance to the outfall pipe. Coefficients for a rounded entrance are obtained by reduction of the chart values as stated below. The design of manholes with deflector devices is discussed separately.

To use the chart:

1. Determine the outfall pipe pressure line elevation - Gen. Instr. 1.
2. Calculate the velocity head in the outfall - Gen. Instr. 2.
3. Calculate the ratios D_L/D_O and B/D_O - Gen. Instr. 3.
4. Enter the lower graph of Figure B.8 Chart 8 at the pipe size ratio D_L/D_O and read at the curve or interpolated curve for the manhole size ratio B/D_O. For all flow from a lateral, $K_L = \overline{K_L}$.
5. For a rounded outfall pipe entrance or one formed by a pipe socket reduce the chart value of $\overline{K_L}$ by 0.3 as defined by Gen. Instr. 6.
6. Calculate the charge of pressure (always positive for 90° deflections). $h_L = K_L\left(\frac{V_O^2}{2g}\right)$
7. Add h_L to the elevation of the outfall pressure line at the branch point to obtain the elevation of the lateral pipe pressure line at this point.
8. The water surface elevation in the manhole will be above the lateral pipe pressure line. To determine the water-surface elevation use Figure B.9 Chart 9 as instructed in steps (12) through (18) of the instructions for a square manhole at the junction of a 90° lateral with a through main.
9. Check to be sure the water surface elevation is above the pipe crowns to justify using these charts and that it is sufficiently below the top of the manhole to indicate safety from overflow.

B. **Round Manhole at 90° Deflection - Figure B.8 Chart 8**

Pressure change coefficients may also be obtained from this chart for use in determining the elevation of the pressure line of an upstream pipe connected by means of a round manhole to an outfall pipe at a 90° angle.

To use the chart:

1. Proceed as instructed in steps (1) through (4) for a square manhole at a 90° deflection to obtain a base value of $\overline{K_L}$ for the particular values of D_L/D_O and B/D_O.
2. To provide for the effects of the round manhole cross section, reduce $\overline{K_L}$ in accordance with the following table:

Reductions of $\overline{K_L}$ for $\frac{D_L}{D_O}$

B/D0 \ DL/D0=	0.6	0.8	1.0	1.2
1.75	0.4	0.3	0.2	0.0
1.33	0.3	0.2	0.1	0.0
1.10	0.2	0.1	0.0	0.0

The reduced values apply for a sharp-edged entrance to the outfall pipe.

3. With a well-rounded entrance to the outfall pipe from a round manhole, reduce $\overline{K_L}$ of step (1) by 0.3 with no further reduction for manhole cross section shape.
4. Follow steps (6) through (9) as detailed for square manholes at a 90° deflection.

C. **Deflectors in Square or Round Manholes at 90° Deflection - Figure 7.2.6.6.1.8 Chart 8**

Pressure change coefficients are presented in this chart for use in determining the elevation of the pressure line of an upstream pipe connected to an outfall pipe at a 90° angle by means of a square or round manhole modified by flow deflectors. Deflectors in a manhole effectively eliminate the effects related to the shape of the manhole. The basic types of deflector walls which may be constructed in

square or round manholes to effect a reduction of the pressure loss are detailed and described in the comprehensive report of the investigation.

The deflectors which are most easily constructed and are as effective as more complex types provide a vertical wall to guide the flow toward the outfall pipe. The wall need not be higher than the outfall pipe diameter and must fill in that part of the manhole opposite the lateral pipe exit so that it is flush with the side of the outfall pipe. Three basic types of such deflector walls are possible and are included in the curves of Figure B.8 Chart 8. These three are (1) walls parallel to the outfall pipe centerline or 0° walls, (2) inclined walls, limited to an angle of about 15° to the outfall centerline if an upstream in-line pipe is to be used, and (3) walls at 45° to both the lateral and outfall pipes, or walls curved on a radius of about the manhole dimension extending from lateral to outfall, and therefore to be used only when no upstream in-line pipe is involved. Rounding of the corner formed between the deflector wall and the manhole floor is not required, and may be detrimental in some cases.

To use the chart:

1. Determine the outfall pipe pressure line elevation - Gen. Instr. 1.
2. Calculate the velocity head in the outfall - Gen. Instr. 2.
3. Classify the type of deflector used:
   a. Parallel wall - 0°
   b. Inclined wall - 5° to 15°
   c. 45° or curved wall.
4. Calculate the ratios D_L/D_O and B/D_O. No distinction between square and round manholes is necessary.
5. If B/D_O is 1.5 or less, enter the lower graph of the chart at the ratio D_L/D_O and read at the curve for the appropriate deflector type. In the case of a parallel wall, use the curve for $B/D_O = 1.00$. $\overline{K_L}$
6. If B/D_O is more than 1.5 and less than 2.0, use the same dashed curve for 45° or curved deflectors, use the curve for $B/D_O = 1.10$ for 5° to 15° angle deflectors, and use the curve for $B/D_O = 1.20$ for 0° angle deflectors.
7. A rounded entrance to the outfall pipe or one formed by a pipe socket is less effective in reducing the pressure change with deflectors than when deflectors are not used. A reduction of by 0.l may be justified. $\overline{K_L}$
8. Calculate the change of pressure: $h_L = K_L\left(\frac{V_O^2}{2g}\right)$ (for $Q_L = Q_O$, $K_L = \overline{K_L}$)
9. Add h_L to the elevation of the outfall pressure line at the branch point to obtain the elevation of the lateral pipe pressure line at this point.
10. The water-surface elevation in the manhole will be above the lateral pipe pressure line. To determine the water surface elevation use Figure B.9 Chart 9 as instructed in steps (2) through (8) for deflectors in a manhole at the junction of a 90° lateral with a through main.
11. Check to be sure the water surface elevation is above the pipe crowns to justify using these charts and that it is sufficiently below the top of the manhole to indicate safety from overflow.

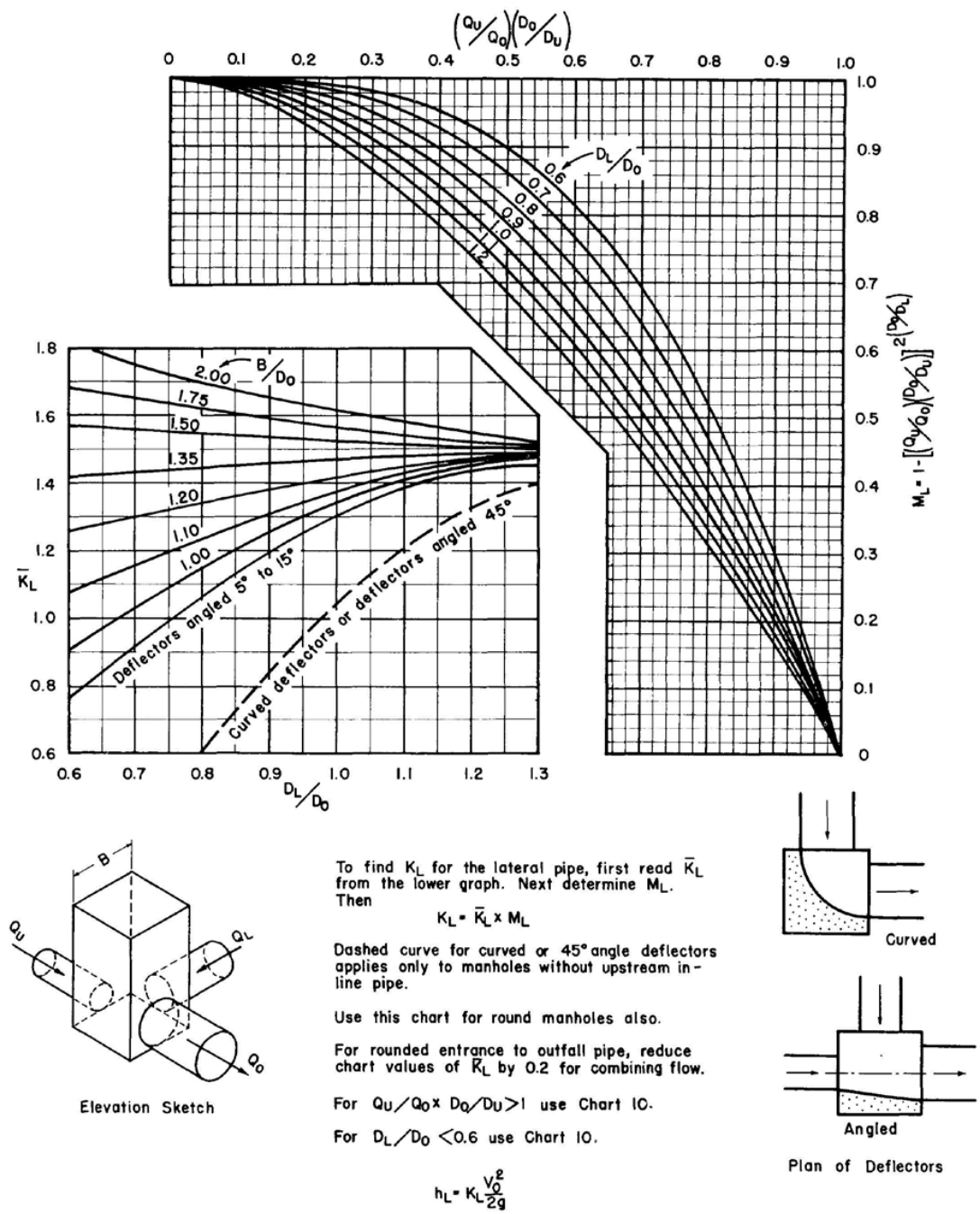

Figure B.8 Chart 8 - Square or Round Manhole At 90° Deflection Or On Through Pipeline At Junction Of 90° Lateral Pipe (Lateral Coefficient)
(Source University of Missouri E.S.B. #41)

B.9 - CHART 8 and CHART 9

A. **Square Manhole on Through Pipeline at Junction of a 90° Lateral Pipe - Charts 8 & 9 (Larger Size Laterals: $D_L / D_O > 0.6$)**

Pressure change coefficients for use in determining the elevation of the pressure line of the 90° lateral pipe are obtained from Figure B.8 Chart 8, and the coefficients for the upstream in-line pipe are obtained from Figure B.9 Chart 9. The diameter of the lateral pipe must be at least 0.6 of the diameter of the outfall

pipe to permit use of these charts. Pressure changes at junctions of smaller laterals may be obtained through use of Figure B.10 Chart 10. The coefficients given by the charts apply directly to a square-edged entrance to the outfall pipe. Coefficients for a rounded entrance are obtained by reduction of the chart values as stated below. The design of manholes with deflector devices is discussed separately.

To use the charts:

1. Determine the outfall pressure line elevation - Gen. Instr. 1.
2. Calculate the velocity head in the outfall - Gen. Instr. 2.
3. Calculate the ratios Q_U/Q_O, D_U/D_O, and D_L/D_O. If D_L/D_O is less than 0.6, use Figure B.10 Chart 10 instead of Figure B.8 Chart 8 and Figure B.9 Chart 9.
4. Calculate the ratio B/D_O and note if the outfall entrance is rounded.
5. Calculate the factor ; if this is greater than 1.00, use Figure B.10 Chart 10 instead of Figure B.8 Chart 8 and Figure B.9 Chart 9. $\left(\frac{Q_U}{Q_O}\right)\left(\frac{D_O}{D_U}\right)$

For lateral pipe:

6. Enter the lower graph of Figure B.8 Chart 8 at the ratio D_L/D_O and read at the curve or interpolated curve for the ratio B/D_O. $\overline{K_L}$
7. For a rounded outfall pipe entrance or one formed by a pipe socket as defined by Gen. Instr. 6, reduce the chart value of by 0.2. $\overline{K_L}$
8. Determine the factor ML by entering the upper graph of Figure B.8 Chart 8 at the value of the factor and at the curve or interpolated curve for D_L/D_O. $\left(\frac{Q_U}{Q_O}\right)\left(\frac{D_O}{D_U}\right)$
9. Calculate . $K_L = M_L \times \overline{K_L}$
10. Calculate the lateral pipe pressure change
11. Add h_L to the elevation of the outfall pipe pressure line at the branch point to obtain the elevation of the lateral pipe pressure line at this point.

For upstream in-line pipe:

12. Enter the lower graph of Figure B.9 Chart 9 at the ratio D_L/D_O and read at the curve or interpolated curve for B/D_O. $\overline{K_U}$
13. For a rounded entrance to the outfall pipe or one formed by a pipe socket, reduce by 0.2. $\overline{K_U}$
14. Determine the factor MU from the upper graph of Figure B.9 Chart 9.
15. Calculate $K_U = M_U \times \overline{K_U}$.
16. Calculate the upstream in-line pipe pressure change: $h_U = K_U\left(\frac{V_O^2}{2g}\right)$
17. Add h_U to the elevation of the outfall pipe pressure line at the branch point to obtain the elevation of the upstream in-line pipe pressure line at this point.

For water surface:

18. The water-surface elevation in the manhole will correspond to the upstream in-line pipe pressure line at the branch point.
19. Check to be sure that the water surface elevation is above the pipe crowns to justify using these charts and that it is sufficiently below the top of the manhole to indicate safety from overflow.

B. **Round Manhole on Through Pipeline At Junction of a 90° Lateral Pipe-Charts 8 and 9 (Larger Size Laterals: $D_L/D_O > 0.6$)**

Pressure change coefficients may also be obtained from Figure B.8 Chart 8 and Figure B.9 Chart 9 for use in determining the elevations of the pressure lines of the 90° lateral pipe and the upstream in-line pipe connected by a round manhole to an outfall pipe.

To use the charts:

1. Proceed as instructed by steps (1) through (6) for a square manhole at a similar junction to obtain a base value of . $\overline{K_L}$

For lateral pipe:

2. To provide for the effects of the round manhole cross-section, reduce in accordance with the following table: $\overline{K_L}$

   Reduction of $\overline{K_L}$ for $\frac{D_L}{D_O}$

B/D0 \ DL/D0=	0.6	0.8	1.0	1.2
1.75	0.4	0.3	0.2	0.0
1.33	0.3	0.2	0.1	0.0
1.10	0.2	0.1	0.0	0.0

   The reduced values apply for a sharp-edged entrance to the outfall pipe.

3. With a well-rounded entrance to the outfall pipe from a round manhole, reduce obtained in step (2) by 0.1. $\overline{K_L}$

4. Determine the factor ML from the upper graph of Figure B.8 Chart 8 and proceed as instructed in steps (8) through (11) for a square manhole to complete the determination of the elevation of the lateral pipe pressure line.

For upstream in-line pipe:

5. Proceed as instructed in steps (12) through (17) for a square manhole at a similar junction to obtain the elevation of the upstream in-line pipe pressure line. Note that no reduction of is to be made for effects of the round manhole cross-section. $\overline{K_L}$

For water surface:

6. Proceed as instructed by steps (18) and (19) for a square manhole at a similar junction.

C. **Deflectors in Square or Round Manholes on Through Pipeline at Junction of a 90° Lateral Pipe-Charts 8 and 9 (Larger Size Laterals: $D_L/D_O > 0.6$)**

Pressure change coefficients are also presented in Figure B.8 Chart 8 and Figure B.9 Chart 9 for use in determining the elevations of the pressure lines of the lateral and in-line pipes at a junction of this type, with either a square or a round manhole modified by flow deflectors. Deflectors in a manhole effectively eliminate the effects related to the shape of the manhole. Deflector types are described in the instructions for use of Figure B.8 Chart 8 for a manhole with deflectors at a 90° deflection of a storm drain. The curved and 45° deflectors cannot be used in a manhole on a through pipeline because of the space required for through in-line flow.

To use the charts:

1. Proceed as instructed in steps (1) through (9) for deflectors in a manhole at a 90° deflection, disregarding references to 45° or curved walls. Through use of Figure B.8 Chart 8 these steps will give the elevation of the lateral pipe pressure line at the branch point. As noted in the instructions for a manhole of this type without deflectors, Figure B.10 Chart 10 must be used when $D_L/D_O > 0.6$ or $\left(\frac{Q_U}{Q_O}\right)\left(\frac{D_O}{D_U}\right) > 1.00$.

For upstream in-line pipe:

2. Enter the lower graph of Figure B.9 Chart 9 at the ratio D_L/D_O and read for all manhole sizes and any deflector wall angle from 0° to 15° at the curve for $B/D_O = 1.00$. $\overline{K_U}$
3. For a rounded entrance to the outfall pipe or one formed by a pipe socket, reduce by 0.1. $\overline{K_U}$
4. Determine the factor M_U from the upper graph of Figure B.9 Chart 9.
5. Calculate $K_U = M_U x$. $\overline{K_U}$
6. Calculate the upstream in-line pipe pressure change $h_U = K_U$. $\left(\frac{V_O^2}{2g}\right)$
7. Add h_U to the elevation of the outfall pipe pressure line at the branch point to obtain the elevation of the upstream in-line pipe pressure line at this point.

For water surface:

8. The water-surface elevation in the manhole will correspond to the upstream in-line pipe pressure line at the branch point.
9. Check to be sure that the water-surface elevation is above the pipe crowns to justify using these charts and that it is sufficiently below the top of the manhole to indicate safety from overflow.

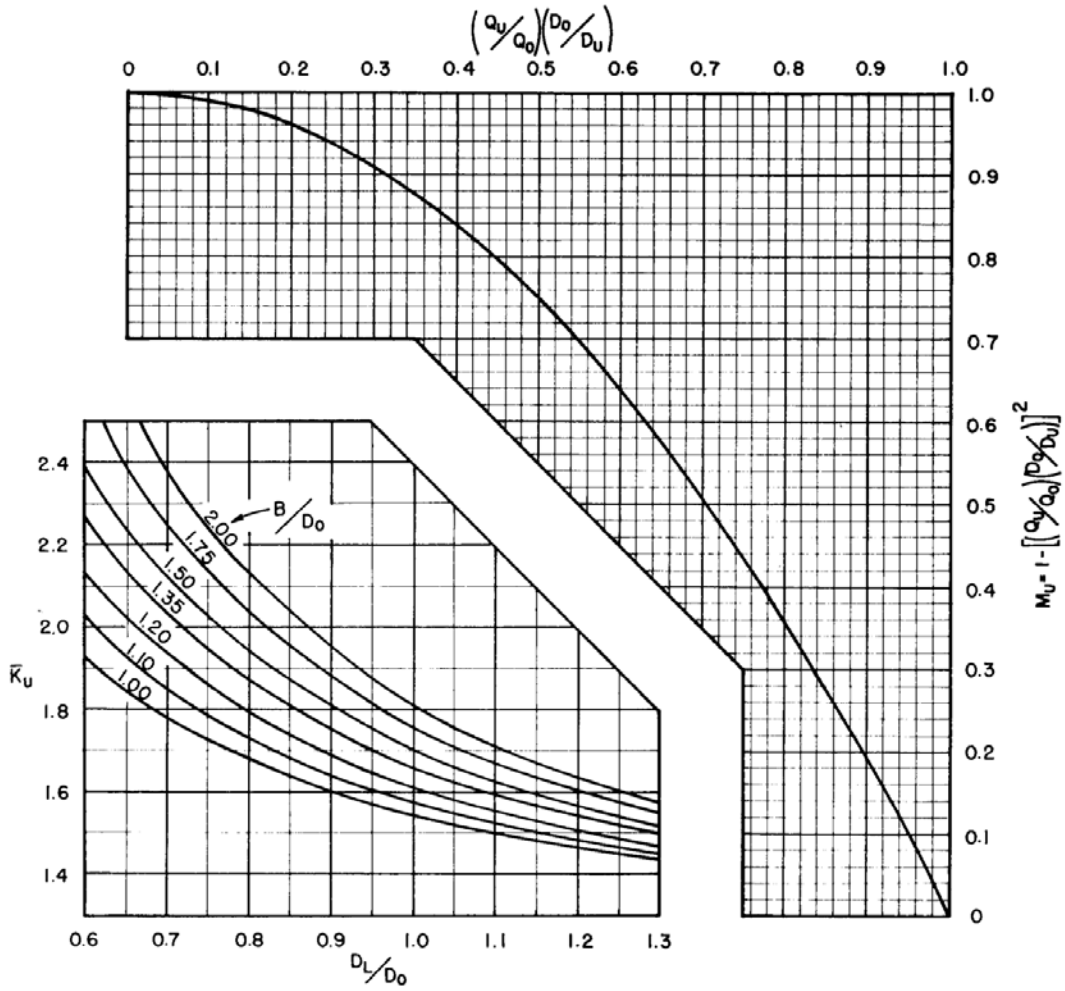

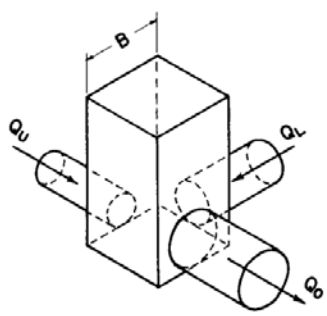

Elevation Sketch

To find K_U for the upstream main, first read $\bar{K}_U$ from the lower graph. Next determine M_U. Then

$$K_U = \bar{K}_U \times M_U$$

For manholes with deflectors at 0° to 15°, read $\bar{K}_U$ on curve for $B/D_0 = 1.0$

Use this chart for round manholes also.

For rounded entrance to outfall pipe, reduce chart values of $\bar{K}_U$ by 0.2 for combining flow.

For deflectors refer to sketches on Chart 8.

For $Q_U/Q_0 \times D_0/D_U > 1$ use Chart 10

For $D_L/D_0 < 0.6$ use Chart 10

$$h_U = K_U \frac{V_0^2}{2g}$$

Figure B.9 Chart 9 - Square Or Round Manhole On Through Pipeline At Junction Of A 90° Lateral Pipe (In-line Pipe Coefficient) *(Source University of Missouri E.S.B. #41)*

B.10 - CHART 10 - Square or Round Manhole on Through Pipe Line at Junction of 90° Lateral Pipe (Smaller Size Laterals D / D < 0.6)="">

Pressure change coefficients are presented in Figure B.10 Chart 10 for use in determining the common elevation of the pressure lines of the lateral and in-line pipes at a junction of this type for cases of pipe sizes or flow divisions outside the range over which Figure B.8 Chart 8 and Figure B.9 Chart 9 may be applied. Figure B.8 Chart 8 and Figure B.9 Chart 9 are more reliable within their range and should be used if possible. Neither manhole shape nor size nor relative size of lateral pipe modify the coefficients of Figure B.10 Chart 10. The chart may also be used for direct connection of a 90° lateral to a main without use of a manhole. The coefficients of the chart apply directly to a square-edged entrance to the outfall pipe. Coefficients for a rounded entrance are obtained by reduction of the chart values as stated below. Deflectors in the manhole are not effective in the ranges covered by Figure B.10 Chart 10, and therefore need not be used.

To use the chart:

1. Determine the outfall pipe pressure line elevation - Gen. Instr. 1.
2. Calculate the velocity head in the outfall - Gen. Instr. 2.
3. Calculate the ratios D_L/D_O, D_U/D_O, and Q_U/Q_O - Note that use of Figure B.8 Chart 8 and Figure B.9 Chart 9 is advisable if the size and flow factors are within their range. Figure B.10 Chart 10 should not be used for $Q_U/Q_O < 0.7$ if other solutions are possible.
4. Note whether the outfall entrance is to be rounded or formed by a pipe socket as defined by Gen. Instr. 6.
5. Enter Figure B.10 Chart 10 at the ratio D_U/D_O and read K_U (also equal to K_L) at the curve or interpolated curve for Q_U/Q_O.
6. 6. If was found to be greater than 1.00 in an attempt to use Figure B.8 Chart 8 and Figure B.9 Chart 9, K_U of step (5) will be negative in sign, thus providing a check on proper use of the charts. $\left(\frac{Q_U}{Q_O}\right)\left(\frac{D_O}{D_U}\right)$
7. For rounded entrance from the manhole to the outfall pipe use the reduced values from the chart.
8. Calculate the change-of pressure $h_U = h_L = K_U$, h_U and h_L are positive or negative depending on the sign of K_U as read from the chart. $\left(\frac{V_O^2}{2g}\right)$
9. Add a positive h_U to or subtract a negative h_U from the elevation of the outfall pipe pressure line at the branch point to obtain the elevation of the upstream in-line pipe pressure line at this point.
10. The elevation of the lateral pipe pressure line at the branch point and the water surface elevation in the manhole will correspond to the upstream in-line pipe pressure line elevation found in step (9).
11. Check to be sure that the water-surface elevation is above the pipe crowns to justify using these charts and that it is sufficiently below the top of the manhole to indicate safety from overflow.

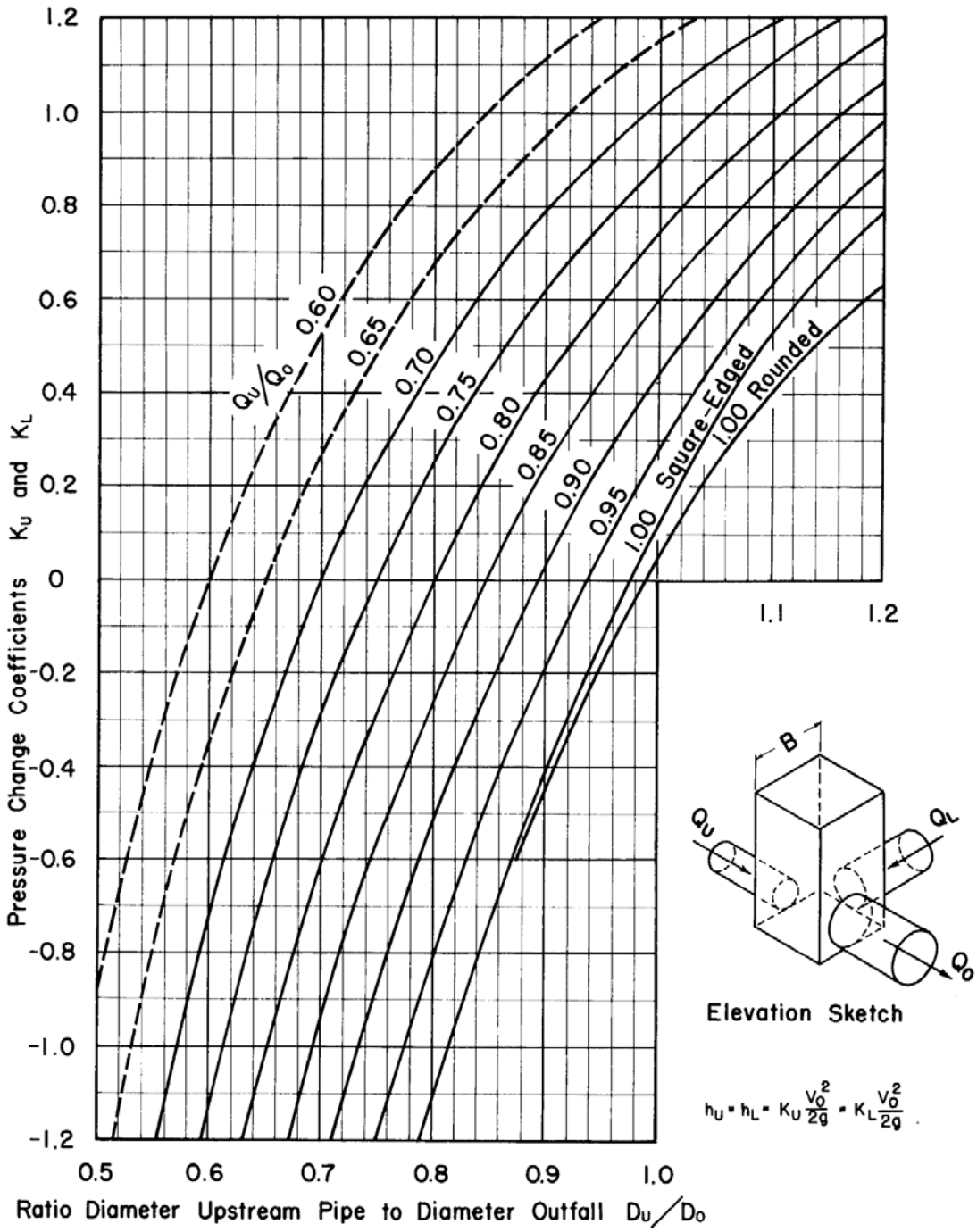

Figure B.10 Chart 10 - Square Or Round Manhole On Through Pipeline At Junction Of A 90° Lateral Pipe (For Conditions Outside Range Of Figure B.8 Chart 8 and Figure B.9 Chart 9) *(Source University of Missouri E.S.B. #41)*

B.11 - References

• University of Missouri. *Pressure Changes at Storm Drain Junctions - Engineering Bulletin No. 41*. University of Missouri, Columbia, MO, 1958.

1.2 - Acronyms And Abbreviations

A14	Atlas 14 Precipitation-Frequency Atlas of the United States, Volume 11, Version 2.0: Texas (as published by NOAA)
AASHTO	American Association of State Highway Officials
AC	Asphalt Concrete
ACPA	American Concrete Pipe Association
ADA	Americans with Disabilities Act
AEP	Annual Exceedance Probability
ASTM	American Society for Texting Materials
BFE	Base Flood Elevation
BMP	Best Management Practice
CFR	Code of Federal Regulations
cfs	cubic feet per second
CIP	Capital Improvements Program
CIPP	Cast-in-Place Pipe
City	City of San Antonio
CLOMR	Conditional Letter of Map Revision
CLOMR-F	Conditional Letter of Map Revision - Fill
CMP	Corrugated Metal Pipe

CoSA	City of San Antonio
CRS	Community Rating System
CWA	Clean Water Act
DSD	Development Services Department
EARZ	Edwards Aquifer Recharge Zone
EGL	Energy Grade Line
EPA	Environmental Protection Agency
FEMA	Federal Emergency Management Agency
FHWA	Federal Highway Administration
FILO	Fee in Lieu of Detention
FIRM	Flood Insurance Rate Map
FIS	Flood Insurance Study
fps	feet per second
Fr	Froude Number
GIS	Geographic Information System
gpm	gallons per minute
HDPE	High Density Polyethylene
HEC-RAS	Hydraulic Engineering Center, River Analysis System
HGL	Hydraulic Grade Line
hp	horsepower
ICL	Inside City Limits

ID	Inside Diameter
ITS	Intelligent Transportation System
Inv.	Invert
JD	Jurisdictional Delineation
LID	Low Impact Development
LOMA	Letter of Map Amendment
LOMR	Letter of Map Revision
LOMR-F	Letter of Map Revision - Fill
MBC	Multi Box Culvert
MDP	Master Development Plan
MCC	Motor Control Center
NFIP	National Flood Insurance Program
NOAA	National Oceanic and Atmospheric Administration
NOI	Notice of Intent
NOT	Notice of Termination
NPDES	National Pollutant Discharge Elimination System
NRCS	Natural Resource Conservation Service
OD	Outside Diameter
OSHA	Occupational Safety and Health Administration
PCCP	Portland Cement Concrete Pavement
pcf	pounds per cubic foot

PLC	Programmable Logic Controller
PMF	Probable Maximum Flood
PMP	Probable Maximum Precipitation
PMR	Physical Map Revision
PUD	Planned Unit Development
RCBC	Reinforced Concrete Box Culvert
RCP	Reinforced Concrete Pipe
ROW	Right of Way
RSWF	Regional Storm Water Facilities
RSWMP	Regional Storm Water Management Program
SARA	San Antonio River Authority
SAWS	San Antonio Water System
SCS	Soil Conservation Service (changed to NRCS)
SFHA	Special Flood Hazard Area
SWMP	Storm Water Management Plan
TAS	Texas Accessibility Standards
TCI	Transportation & Capital Improvements
TCEQ	Texas Commission on Environmental Quality
TPDES	Texas Pollutant Discharge Elimination System
Typ.	Typical
TxDOT	Texas Department of Transportation

USACE	United States Army Corps of Engineers
USBR	United States Bureau of Reclamation
USDOT	United States Department of Transportation
USFW	United States Fish and Wildlife Agency
USGS	United States Geological Survey
VFD	Variable Frequency Drives
V.T.C.A.	Vernon's Texas Codes Annotated
WOUS	Waters of the United States